Arrester 氧化锌避雷器

避雷器系列 Arrester Series

基本原理 Baisc Principle

避雷器是一种过电压保护器，主要用于保护电力系统，铁道电气化系统，通讯系统中的各种电气设备（变压器、开关、电容器、阻波器、互感器、发电机、电动机、电力电缆等）免遭大气过电压，操作过电压和工频暂态过电压等损坏，是电力系统绝缘配合的基础。金属氧化物避雷器的其核心元件（电阻片）采用以氧化锌为主的先进配方，具有十分优异的非线性（伏—安）特性，即在正常工作电压之下，通过的电流只有微安级，当遭受到过电压时，通过的电流瞬间达到数千安培，使避雷器处于导通状态，释放过电压能量，从而有效地限制了过电压对输变电设备的侵害。传统的碳化硅避雷器有因陡波放电延迟而引起的陡波放电电压高，操作波放电分散性大导致操作波放电电压高等缺点。而氧化锌避雷器具有良好的陡波放电延迟而引起的陡波放电电压高、操作波放电分散性大导致操作波放电电压高等缺点。而氧化锌避雷器具有良好的陡波响应特性，能使陡波电压无延迟，操作残压低，没有放电分散性等优点。使得陡波、操作波下的保护裕度大大提高，而且在绝缘配合方面，能够做到陡波、雷电波、操作波的保护裕度接近一致，从而对电力设备提供最佳的保护。复合外套金属氧化物避雷器，采用整体模压成型、两头包封工艺，密封性能良好、防爆性能优良，耐污秽免清洗并能减少雾天湿闪发生，耐电蚀、抗老化，体积小、重量轻，便于安装和维护，是瓷套避雷器的更新换代产品。

Arrester is a kind of overvoltage protector mainly applied for the protection of various electrical appliances (such as transformer ,switch ,capacitor ,trap, mutual Inductor ,generator ,motor and power cable etc.) in power system .railway electrification system and communication system from being damaged by atmosphere overvoltage, operation overvoltage and power frequency temporary overvoltage etc. The arrester is the basis of insulation coordination in power system. The core elements of metal oxide arrester (resistor disc) applies an advanced formulate with zinc oxide as the main material and has an outstanding nonlinear properties (voltage-ampere).That is, under the normal operating voltage, the current passing through is only on microampere level. When overvoltage is incurred ,the current passing through can be thousands of amperes instantly and the arrester is switched into conduction to release the energy of overvoltage. By this means the damage caused by overvoltage on the electric transmission and transformation equipments can be effectively restrained . The traditional silicon carbide arrester has high steep wave discharging voltage caused by steep wave discharging and the operation wave discharging voltage is high caused by discharging decentrality .While the zinc oxide arrester has good steep wave response properties and make no delay on steep wave voltage and provide low residual voltage during operation; and also has the advantage of no discharging decentrality .The arrester can greatly improve the protective margin of the steep wave and operation wave. And on insulation coordination, the proactive margins of steep wave, lightening wave and operation wave are nearly consistent and best protection can be provided for the power equipments. Composite coating metal oxide arrester applies integrated extruding shaping and both-end envelopment techniques and can provide high performances of sealing and anti-explosion ,pollution resistance, free of cleaning and reducing the wet flashover in foggy conditions .The product is also featured by electrical erosion resistance ,aging resistance ,small volume, light weight and easy installation and maintenance; and is the upgraded new generation product of porcelain sheath arrester.

技术标准 Technical Standard

产品生产执行的标准为GB 11032-2010(eqvIEC60099-4:2006)《交流无间隙金属氧化物避雷器》、JB/T 8952-2005《交流系统用复合外套无间隙金属氧化物避雷器》

The applicable standards of the product include GB 11032-2010(eqv IEC60099-4:2006) Alternating non-clearance current metal oxide lightning arrester and JB/T8952-2005AC System composite Coating Non-clearance Metal Oxide Lighting Arrester.

使用条件 Environmental Conditions for Application

电源频率 Power supply frequency	48Hz-62Hz
环境温度 Ambient temperature	-40℃~+40℃
最大风速 Maximum wind speed	≤35m/s
海拔高度 Altitude	≤2000m
地震烈度 Earthquake intensity	≤8
覆冰厚度 Ice thickNess	≤10mm

1. 长期施加的工频电压不超过其持续运行电压。
2. 太阳光的辐射：太阳最大照射（1.1kW/m²）的影响已经在产品形式中予以考虑，如果避雷器附近有其它热源，避雷器的使用需供需双方协商。

1. Long-term applied power frequency voltage does not exceed its constant operation voltage.
2. Sunray radiation: The impact of a maximum sunray(1.1kW/m²)has been taken into account in the product form testing. If other heat resources exist around the arrester, please consult the manufacture for the application of arrester.

产品型号说明 Type Specifications

YH 5 W S 5 - 17 / 50 □

附加特征 W-防污 G-高原 K-抗震 L-脱离器
Additional features: W-pollution resistance G: plateau L: quakeproof

标称放电电流下最大残压kV(峰值)
Maximum residual voltage under nominal discharging current kV(peak value)

避雷器额定电压kV（有效值）
Arrester rated voltage kV(effective value)

设计序号 Design serial number

使用场所 S:配电Z:电站 R:电容器组 X-线路 T：铁道 D-电机型 O-用于油中 L:直流
Application location: S: distribution Z: power plant R: capacitor
X: circuit T: railway D: motor type O: in oil L: direct current

结构特征 W-无间隙 C：串联间隙 R:并联间隙
Construction feature W: without clearance C: series connection clearance
R: parallel connection clearance

标称放电电流kA
Nominal dischanging current kA

复合外套金属氧化物避雷器(HY为老型号) Y为瓷外套金属氧化物避雷器
Composite casting metal oxide arrester (HY for old types)
Y for porcelain casing metal oxide arrester

产品特点 Product Features

1. 体积小、重量轻、耐碰撞、运输无碰损、安装灵活，适合在开关柜内使用；
2. 特殊结构，整体模压成型，无气隙，密封性能好，防潮防爆；
3. 爬电距离大，憎水性好，耐污能力强，性能稳定，减少运行维护；
4. 独特配方的氧化锌电阻片，泄露电流小，老化速度慢，使用寿命长。
5. 实际直流参考电压，方波通流容量和大电流耐受值都高于国家标准。

1. Small in size ,light in weight ,durable in collision ,clash and breakAge free in transportation, easy in installation, suitable for application in the switchboard;
2. Special structure, integrated extruding shaping ,without air gap, good sealing performance, damp prevention and explosion prevention;
3. Long creepage distance, good hydrophobicity performance, strong pollution resistance abilities ,and stable performance, reducible in operating maintenance;
4. Zinc oxide resistor disc in special formula, small leakAge current, slow aging speed,long service life
5. The actual DC reference voltage ,square wave discharge capacity and heavy current tolerance value are all higher than the state standards.

用户须知 User Notice

1. 避雷器在安装使用前，应存放在清洁、干燥的房间，不得收到腐蚀性气体或液体的腐蚀。
2. 避雷器在投入运行前，应作预防性试验，在投入运行后，也应定期（10kV及以下避雷器5年一次，35kV及以上避雷器2年一次）做如下试验并参照附表与运行前的数据进行对比；

a. 测量避雷器的绝缘电阻； b. 测量避雷器直流1mA参考电压； c. 测量0.75倍直流1mA参考电压下的泄露电流。

1. Before installation, the arresters shall be stored in clean and dry rooms and kept away form the corrosions by corrosive gas or liquid.
2. Before put into operation, preventative testing shall be made on the arrester. And after the arrester has been put into operation, regular testing shall be made as follows and comparison shall be made with the data before the operation according to the attached table.(Every 5 years for arrester of 10kV or under, and every 2 years for arrester of 35kV and above)

a. Measure the insulation resistance of the arrester; b. Measure the reference voltage of the arrester under the direct current of 1mA
c. Measure the leakAge current under the reference voltage of 0.75 time direct current of 1mA

低压型氧化锌避雷器
Zn Oxide Anester Of Low Voltage Type

避雷器型号 MOA type	系统额定电压 System rater voltage kV(rms)	避雷器额定电压 Moa R.V kV(rms)	持续运行电压 MCOV kV (rms)	直流参考电压 DC (U1mA) <kV(p)	陡波冲击电流残压 Steep current impulse >kV	雷电冲击电流下残压 Lighting current Impulse >kV	操作冲击电流下残压 DC (U1mA) <kV(p)	方波通流容量 Rectangular current Impulse (2ms)A	避雷器额定电压 High current Impulse kA
YH1.5W-0.28/1.3	0.22	0.28	0.24	0.6	1.3			75	25
YH1.5W-0.5/2.6	0.38	0.5	0.42	1.2	2.6			75	25

配电型氧化锌避雷器
Zn Oxide Arrester Of Distribution Type

避雷器型号 MOA type	系统额定电压 System rater voltage kV (rms)	避雷器额定电压 Moa R.V kV (rms)	持续运行电压 MCOV kV (rms)	直流参考电压 DC (U1mA) <kV (p)	陡波冲击电流残压 Steep current impulse >kV	雷电冲击电流下残压 Lighting current Impulse >kV	操作冲击电流下残压 Switching current impulse >kV	方波通流容量 Rectangular current impulse (2ms) A	大电流冲击耐受 High current Impulse kA
YH5W-3.8/15	3	3.8	2	7.5	17.3	15	12.8	75	40
YH5WS-5/15	3	5	4	8	17.3	15	12.8	100	65
YH5WS-7.6/30	6	7.6	4	15	34.5	30	25.5	75	40
YH5WS-10/30	6	10	8	15	34.5	30	25.5	100	65
YH5WS-12.7/50	10	12.7	6.6	25	57.5	50	38.5	75	40
YH5WS-17/50	10	17	13.6	25	57.5	50	38.5	100	65

电站型氧化锌避雷器 Zn Oxide Arrester Of Power Station Type

YH5WZ-10/27

YH5WZ-17/45

YH5WZ-51/134

YH5WZ-51/134J

YH5WZ-51/134E

YH5WZ-51/134G

YH5WZ-51/134

YH5WZ-51/134J

YH10W-100/260

YH10W-100/260

使用场所 Service conditon	型号 Type	避雷器额定电压 MOA Rated voltage kV	系统标称电压 System nominal voltage kV	持续运行电压 Continous operation voltage kV	直流1mA参考电压 DC Min U1mA reference voltage kV≥	残压峰值 Residual voltage(kV)≥			方波冲击电流耐受2000μs Square wave current impulse withstand A	大电流耐受4/10μs High current impulse kA
						1/4 μs 陡波冲击电流 Steep current impulse	8/20 μs 雷电冲击电流 Lightning current impulse	30/60 μs 操作冲击电流 Switching current impulse		
5kA电站 Substation (Z)	YH5WZ-3.8/13.5	3.8	3	3.2	7.2	14.5	13.5	11.5	200	65
	YH5WZ-7.6/27	7.6	6	4.0	14.4	31	27	23		
	YH5WZ-10/27	10	6	8.0	14.4	31	27	23		
	YH5WZ-17/45	17	10	13.6	24	51.8	45	38.3		
	YH5WZ-42/134	42	35	23.4	73	154	134	114	400	100
	YH5WZ-51/134	51		40.8	73	154	134	114		
	YH5WZ-52.7/134	52.7		42.2	73	154	134	114		
	YH5WZ-54/134	54		43.2	73	154	134	114		
	YH5WZ-84/221	84	66	67.2	121	254	221	188	600	100
	YH5WZ-90/224	90		72.5	130	258	224	190		
	YH5WZ-94/224	94		75.5	134	270	234	198		
	YH5WZ-98/250	98	110	75	140	287	250	212	800	100
	YH5WZ-100/260	100		78	145	299	260	221		
	YH5WZ-102/266	102		80	148	305	266	226		
	YH5WZ-108/281	108		84	157	323	281	239		
	YH5WZ-116/302	116		88.2	168	347	302	256		
10kA电站 Substation (Z)	YH5WZ-51/134	51	35	40.8	73	154	134	114	400	100
	YH5WZ-52.7/134	52.7		42.2	73	154	134	114		
	YH5WZ-72/184	72	66	57	105	211	184	165	600	100
	YH5WZ-75/223	75		60	127	256	223	190		
	YH5WZ-75/230	75		60	127	256	230	196		
	YH5WZ-75/250	75		60	127	288	250	213		
	YH5WZ-84/215	84		67.2	122	245	215	181		
	YH5WZ-90/235	90		72.5	130	264	235	201		
	YH5WZ-96/250	96	110	75	140	280	250	212	600	100
	YH5WZ-100/260	100		78	145	291	260	221		
	YH5WZ-102/266	102		79.6	148	297	266	226		
	YH5WZ-108/281	108		84	157	315	281	239		
	YH5WZ-116/302	116		88	168	338	302	257		
	YH5WZ-120/300	120		96	174	335	300	270		
	YH5WZ-126/328	126		95.8	183	367	328	279		
	YH5WZ-150/400	150		115	230	444	400	352		

避雷器典型参数表 The Technical Parameters Of Transmission Line Moa

避雷器 Transmission MOA type	系统电压 System voltage kVr.m.s	本体持续运行电压 Cont.oper. voltage for body kVr.m.s	直流参考电压不小于 Refer.voltage at 1mA d.c. U1mA d.c. kV	8/0μs雷电残压不大于 Max.re sidual voltage at lightning impulse kV crest	2ms方波通流容量 2ms rectangular current discharge capacity A	4/10μs冲击通流容量 4/10 μ s Impulse discharge capacity kA	结构高度 H Height mm	间隙距离 Gap distance mm	图号 NO.of fig
YH10WX-18/57TL	10	15	28.5	57	150	65	300	/	/
YH10WX-54/142TL	35	43.2	77	142	400	100	700		图29
YH10WX-57/170TL	35	45	85	170	400	100	700	/	图29
YH10WX-96/250TL	66	75	140	250	400	100	1270	/	图32
YH10WX-108/281TL	110	84	157	297	400	100	1270	/	图32
YH10WX-114/297TL	110	89	165	297	400	100	1270	/	图32
YH10WX-120/334TL	110	93	180	334	400	100	1270	/	图32
YH5CX-11/27	10	9	16.5	27	150	65	207	16.5	图34
YH10CX-42/120K	35	33.6	60	120	400	100	850	120±20	图28
YH10CX-42/120	35	33.6	60	120	400	100	940	120±20	图30
YH10CX-69/198K	66	55.2	100	198	400	100	/	390±50	/
YH10CX-69/198	66	55.2	100	198	400	100	/	390±50	/
YH10CX-90/260	110	72	130	260	400	100	1810	460±20	图33
YH10CX-90/260K	110	72	130	260	400	100	1510	450±50	图31
YH10CX-96/280	110	76.8	140	280	400	100	1810	460±50	图33
YH10CX-96/280K	110	76.8	140	280	400	100	1510	450±50	图31
YH10CX-180/520	220	144	260	520	600	100	3100	960±20	图36
YH10CX-180/520K	220.	144	260	520	600	100	2700	850±20	图35
YH10CX-192/560	220	153.6	280	560	600	100	3100	960±20	图36
YH10CX-192/560K	220	153.6	280	560	600	100	2700	850±50	图35

注：C-带间隙　W-无间隙　X-线路型　K-空气间隙　无K-绝缘子间隙　TL-带脱离装置

瓷外套金属氧化物避雷器
Porcelain Housed Metal-Oxide Surge Arrester




避雷器型号 MOA type	标称电压 Nominal voltage kV (rms)	避雷器额定电压 Moa R.V kV (rms)	持续运行电压 MCOV kV (rms)	直流参考电压 DC (U1mA) <kV (p)	标称放电电流下残压 Nominal residual voltage >kV	方波通流容量 Rectangular current impulse (2ms) A	重量 Weight	高度 H (mm)	备注 Remark
Y5WS1-3.8/17	3	3.8	2.0	7.5	17	75	2.0	205	配电型 Distrib-ution type
Y5WS1-7.6/30	6	7.6	4.0	15	30	75	2.4	205	
Y5WS1-12.7/50	10	12.7	6.6	25	50	75	2.7	245	
Y5WS1-5.0/17	3	5.0	3.5	7.5	17	75	2.0	205	
Y5WS1-10/30	6	10	7.0	15	30	75	2.2	205	
Y5WS1-17/50	10	17	11.5	25	50	75	2.7	245	
Y5WZ1-3.8/17	3	3.8	2.0	7.2	13.5	150	2.0	205	电站型 Power station type
Y5WZ1-7.6/27	6	7.6	4.0	14.4	27	150	2.2	205	
Y5WZ1-12.7/45	10	12.7	6.6	24	45	150	3.0	245	
Y5WZ1-42/134	35	42	23.4	73	134	400	25		
Y5WZ1-5.0/13.5	3	5.0	3.5	7.2	13.5	150	2.0	205	
Y5WZ1-10/27	6	10	7.0	14.4	27	150	2.2	205	
Y5WZ1-17/45	10	17	11.5	24	45	150	3.0	245	
Y5WZ1-51/134	35	51	40	73	134	400	25		

跌落式避雷器 Drop-out Arresters

YH5WS-17/50DL-TB

YH5WS-17/50DL

概述 General

跌落式（可投式、可卸式）避雷器是将氧化锌避雷器改装后巧妙地安装在跌落式熔断器的跌落式机构上，达到在不断电的情况下，可以借助绝缘拉闸操纵杆方便地对避雷器进行检测、维修与更换，不但保证了线路的畅通，而且大大地减少了电力维护人员的工作强度和时间，特别适合于不宜停电的场所如通信、机场、车站、医院、繁华商业区等。产品其他性能同配电型避雷器。

跌落式避雷器增加了脱离器，避雷器被雷击过电后，如果避雷器外观无损坏时，人工用肉眼是较难发现的，这使徐兆故障点进行修复很费时，另一方面如果被雷击过电故障后，由于仍与电网连接，更换新的避雷器时要么需要带电作业，要么就需要线路拉闸停电，给修复更换工作造成麻烦，也拖延了电网恢复时间。

因此我公司设计生产了跌落式避雷器(YH5WS-17/50DL和YH5WS-17/50DL-TB)，利用工频短路电流让脱离器动作，使脱离器接地端自动脱开，避雷器元件翻落，退出运行，防止事故进一步扩大，并易于维护人员及时发现问题进行维护和更换。从根本上解决了避雷器故障点不易于发现的问题，并在不断电的情况下方便更换，确保了日常供电的稳定性，并减少大量的电力维护工作量，节省了大量的人力，极大的提高了工作效率。其翻落原理类似熔断器熔丝熔断引起熔管翻落。我公司采用了目前国际最先进的热爆式脱离器，具有动作速度快，动作电流范围广，又能耐受规定电流冲击和动作负载的优点。

一.避雷器的安装使用经历了以下三个安装使用过程，其优缺点对比如下：

产品型号说明 Model Descripition

YH5WS - □ / □ DL - TB

- TB表示带热爆式脱离器 TB denotes thermo-explosive model disconnector
  TR表示带热熔式脱离器 TR denotes thermo-fuse model disconnector
- 结构形式：DL表示跌落式结构 Structure form: DL denotes falling structure
- 型号含义与常规避雷器相同 The signification of model is same as that of the routine lightning arrester

工作原理

跌落式带脱离装置无间隙金属氧化物避雷(YH5WS-17/50DL-TB)是将带脱离器金属氧化物避雷器的先进理念和跌落式熔断器的原理相结合，除具备金属氧化物避雷器的过电压保护功能外，又可在发生异常故障时，工频短路电流使脱离器动作，其接地端自动脱开，避雷器翻落退出电网运行，检修维护可方便的更换，提高了电网的供电质量。

跌落式避雷器 Drop-out Arresters

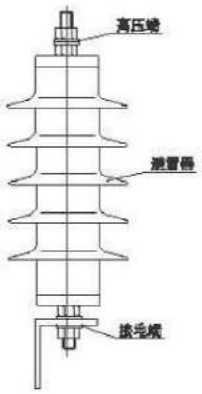

安装方式一

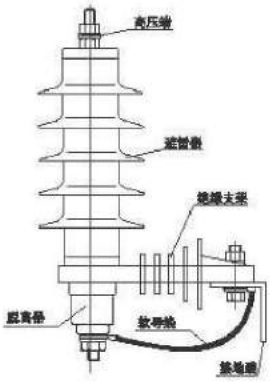

安装方式二

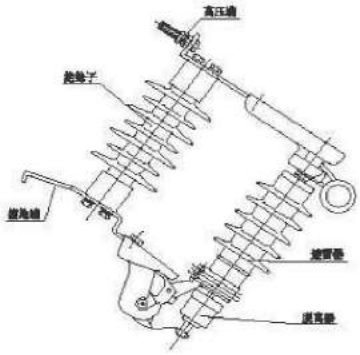

安装方式三

避雷器安装方式一(第一代避雷器安装方式)：

优点：安装方便

缺点：避雷器出现故障不易发现，检修更换需要断电作业，线路维护工作量大，工作效率低。

避雷器安装方式二(第二代避雷器安装方式)：

优点：安装方便，故障点易于发现

缺点：虽然故障点易于发现，由于避雷器在低压端退出电网运行，因此检修更换还需要断电作业，线路维护还是不方便。

避雷器安装方式三(第三代避雷器安装方式)：

优点：安装方便，故障点易于发现，由于避雷器在高压端退出电网运行，因此检修更换可带电作业，节省了大量的人力，极大的提高了工作效率。目前YH5WS17-50DL是比较实用的安装方式。

产品电气参数表 Electrical Parameter Table of Product

避雷器型号 Type	系统额定电压 Rating voltage of system kV(r.m.s)	避雷器额定电压 Rating voltage of lightning arrestar kV(r.m.s)	持续运行电压 Continuous operating voltage kV(r.m.s)	直流参考电压（U1mA） DC reference voltage (U1mA) ≤kV	0.75U1mA下泄漏电流 LeakAge current under 0.75U1mA ≥μA	雷电冲击电流下残压 Residual voltage under the impact of thunder ≥kV	操作冲击电流下残压 Residual voltage under operating impact current ≥kV	方波通流容量(2ms) Square wave through flow capacity(2ms) ≤A	大电流冲击耐受 High current impact withstand ≤kA	使用场所 Application Location
YH5WS-10/30DL	6	10	8.0	15.0	30	25.6	30.0	150	65	配电 Power distribvution
YH5WS-10/30DL-TB										
YH5WS-17/50DL	10	17	13.6	25.0	30	42.5	50.0	150	65	
YH5WS-17/50DL-TB										

注：避雷器的参数同常规避雷器，以上为配电型，可换成电容型 等它类型。

安装使用说明 Operating Instruction Of Installtion

1. 安装使用前请检查避雷器元件与跌落式机构之间的松紧程度，以保证接触良好并投卸灵活。
2. 跌落式机构上接线端接高压线，下接线端必须可靠接地，切勿接反。
3. 避雷器在投入运行前和投入运行后的注意事项同普通避雷器。
4. 当避雷器需要检修或更换时，可在不断电的情况下，借助绝缘拉闸操纵杆对准避雷器单元上的拉钩进行方便的操作，如同更换跌落式熔管。

1. Prior to installation and usage, please check the degree of tightness between lighting arrester components and falling type mechanism to guarantee the good touch and flexible throw and dismounting.
2. The upper terminal post of falling mechanism is connected with high voltage wire, the lower terminal post must be reliable grounding never be reverse connection.
3. The notices prior to putting into use and after putting into use are same as those of the power distribution lighting arrester.
4. In overhaul and change of lightning arrester, In cause of no power failure ,aim at the hook on lightning arrester unit by means of insulation switch-off control rod to make convenient operation, which is same as failing fuse tube.

三相组合式氧化锌避雷器（过电压保护器）
Combined Type Zinc Oxide Lightning Arrester (over-voltage Protector)

概述 General

三相组合式复合外套氧化锌避雷器是一种新型的用于保护电力设备绝缘免受过电压危害的保护电器，它在限制相地间过电压的同时，又对相间过电压进行有效地限制。广泛用于保护真空开关、旋转电机、并联补偿电容器、发电厂、变电站等。这种组合式避雷器已运行了十几年，实践证明是一种切实可行有效限制相间过电压的措施。避雷器内部采用大容量氧化锌电阻片作为主要元件，具有良好的伏安特性和吸收过电压的能力，对被保护设备提供可靠的保护，目前已广为电力系统选用。

Three-phase combined type combined overcoat zinc oxide lightning arrest, one kind of new type protecting electric equipment for protecting the insulation of electric equipment form over-voltage harm ,It restricts the over-voltage among phases effectively while restricting the over-voltage between phase and ground .It is widely used for protecting vacuum switch ,rotating electrical machines, parallel connector compensation capacitor ,power plant and transformer substation and so on. The combined type lightning arrester has run for several decades of years. The practice proves that it is an operable measure for effectively restricting over-voltage among phases. Inside the lightning arrester ,with good voltage-current characteristic and absorbing over-voltage capacity, large capacity zinc oxide resistance piece is used as main component which provide reliable protection for protected equipments. It is widely selected and used for electric power system at present.

技术标准 Technical Standard

本产品执行国标GB 11032-2010《交流无间隙金属氧化物避雷器》，复合外套产品同时执行JB/T 8952-2005《交流系统用复合外套无间隙金属氧化物避雷器》、JB/T 10496-2005《交流三相组合式无间隙金属氧化物避雷器》。

National standard GB 11032-2010 gapless metal oxide lightning arrester is implemented for product. JB/T 8952-2005 combined overcoat galpess metal oxide lightning arraster for AD system. JB/T 14096-2005 AD three-phase combined type gapliess metal oxide lightning arrester.

产品特点 Product Features

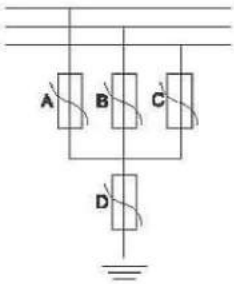

1. 采用四只元件星型接法设计，从而使各相地、相间的过电压都得到保护；结构上的巧妙配合，使一台组合式避雷器起到六台普通避雷器的作用，同时克服了三只避雷器不能保护相间过电压的特点。
2. 组合式结构，外形小重量轻，安装灵活，极大地利用和缩减了使用空间；特点适合在开关柜内安装。
3. 硅橡胶外套整体模坟一次成型，具有良好的密封、耐污、防爆、防潮性能，介电强度高、抗漏痕、抗电蚀、耐热、耐寒、耐老化。
4. 组合式避雷器可以是无间隙型，也可以是有串联间隙型。

1. Use four components star shape connection design, thus obtain the protection between phase and ground and among phases; for the crafty allowance in structure one combined type lightning arrester plays an role of six common lightning arresters, overcome the disadvantage that three lightning arresters can not protect over-voltage among phases at the same time.
2. Combined type structure, small in dimension and light in weight, flexible in installation, greatly utilize and reduce the application room; especially suitable for the installation in the switch cabinet.
3. Silicon rubber overcoat uses one step pressing of die stamping ,with good sealing, anti-pollution, explosion proof and damp proof performance ,high dielectric strength, leakAge trace proof, anti-electric erosion, heat poof ,cold resistant and aging resistant and aging resistant performance.
4. Combined type lighting arrester can be either gapless type or series connection gap type.

使用条件 Sevice Conditions

a. 海拔高度不大于1500米
b. 环境温度：-40℃- +40℃
C. 最大风速不超过35m/s
d. 地震烈度7度及以下地区
e. 长期施加在避雷器上的工频电压不超过避雷器的持续运行电压
f. 电源频率：48HZ-62HZ

a. Height above sea level is not above 1500meters
b. Ambient temperature:-40℃- +40℃
C. The max wind velocity is not beyond 35m/s
d. Earthquake intensity, the area of 7 degree or below
e. Power voltage exerted on lightning arrester for long periods is not beyond the continuous operating voltage of lighting arrester
f. Power frequency:48HZ-62HZ

最适宜：紧凑型开关柜内、电厂厂用系统、电弧炉系统等
Most suitable for: Inside compact type switch cabinet. Power utilization for power plant ,electric are furnace system and so on

产品型号说明 Model Description

YH 5 □□ - □ / □ X □ / □

避雷器额定电压kV/地间标称放电电流下残压
Arrester rated voltage kV/ residual voltage under nominal discharging current between phases and ground

避雷器额定电压kV/相-相间标称放电电流下残压
Arrester rated voltage kV/ residual voltage under nominal discharging current among phases

使用场所Application location:
Z:电站型：保护发电厂、变电站的交流电气设备免受大气过电压和操作过电压的损害
Z-power station type: protect AD electrical equipment in power and transformer substation from the over-voltage of the air and the damage of operation over-voltage
D-保护旋转电动机型：限制真空开关及少油开关切换旋转电机时产生的过电压损坏
D-protection turning motor type: restrict the over-voltage damage of vacuum switch and the damage when little oil switch switches turning motor
R-保护并联补偿电容器型：限制真空开关及少油开关操作电容组时产生的过电压损坏
R-protection parallel connection compensation capacitor type: restrict the over-voltage damage of vacuum switch and the damage when little oil switch operates capacitor group

结构特征 W-无间隙 C：串联间隙
Construction feature W: without clearance C: series connection clearance

标称放电电流kA Nominal discharging current kA

复合外套金属氧化物避雷器(HY为老型号)
Composite casting metal oxide arrester (HY for old types)

用户须知 User Notice

1. 运输、贮存、开箱和安装时，不得强烈碰撞；使用前检查外观是否完好。
2. 投运前测量DC.U1mA, 其值不得小于厂家规定值；测量75%U1mA下泄露电流Ix, Ix≤50μA；投运后定期(5年)测一次DC.u1mA,与初始值比较，变化率不得大于±5；
3. 不需专门维护和清扫。

1. In transportation, storage ,opening box and installation, never strongly bump; prior to usage check whether the appearance is in order.
2. Prior to putting into use, measure DC.U1mA,its value shall not be less than regulated value; measure leakAge current Ix under 75% u1Ma,Ix≤50μA, after putting into use, regularly (five years) measure DC.u1mA one time, compare with the initial value, the change rate shall not above ±5%
3. Do need the special maintenance and clean,

三相组合式氧化锌避雷器型号对照表 Three phase composite zinc oxide arrester model list

目前三相组合式氧化锌避雷器正处于老型号与行业标准JB/T 8459-2011《避雷器产品型号编制方法》型号的过渡期，为了便于广大用户对所购买的产品合理的选型，避免在适用中产生误解，我公司现将几种产品的型号及用途列于下表，供用户参照适用。

Current three phase composite zinc oxide arresters are under the transition period from old models to models regulated in the new trade standard JB/T 8459-2011Product Model Formulation Method for Arresters .To facilitate our clients to make rational model selection on products purchase and wipe away the misunderstandings in applications, our company lists the models and functions of several products in the following table for reference and application of our clients

产品使用场所 Application place of the product		系统电压 System voltage	国家标准型号 National standard model	目前常见的部分老型号 Part of common old models at present			
电站型 Power plant type		6	YH5WZ-10/27 x 2	TBP-B-6.3/F	TCB-Z/6.3	TDP-B-6.3	TDF-B-7.6
		10	YH5WZ-17/45 x 2	TBP-B-10.5/F	TCB-B/10.5	TDP-B-10.5	TDF-B-12.7
		35	YH5WZ-51/150 x 51/134	TBP-B-35	TCB-B-42F	TCB-Z/35	TDF-B-35
并联补偿电容 组 Parallel compent sation capacitor bank		6	YH5WR-10/27 x 2	TBP-C-6.3/F	TCB-R/6.3	TDP-C-6.3	TDF-C-7.6
		10	YH5WR-17/45 x 2	TBP-B-10.5/F	TCB-R/6.3	TDP-C-10.5	TDF-B-12.7F
		35	YH5WR-51/150 x 51/134	TBP-C-35	TBP-C-42F	TCB-R/35	TDF-B-35 TDF-B-42F
保护旋转电机 Protection electrical rotating matching	电动机 Motor	6.3	YH2.5WD-8/25 x 8/19	TBP-A-6.3/F	TCB-D/6.3	TDP-A-6.3	TDF-B-7.6
		10.5	YH2.5WD-13.5/38.7 x 13.5/31	TBP-A-10.5/F	TCB-D/10.5	TDP-B-10.5	TDF-D-12.7F
	发电机 Generator	6.3	YH5WD-8/25 x 8/19	TBP-B-6.3/F	TCB-D/6.3	TDP-B-6.3	TDF-B-7.6
		10.5	YH5WD-13.5/38.7 x 13.5/31	TBP-D-10.5/F	TCB-D/10.5	TDP-B-10.5	TDF-D-12.7F
		13.8	YH5WD-17.5/53 x 17.5/40	TBP-B-13.8/F	TCB-B/13.8	TDP-B-13.8	TDF-D-12.7F
	电机中性点 Motor neutral point	6.3	YH1.5WD-4.6/12	TBP-0-4.6	TBP-0-4.6F	TCB-0-4.6	TDF-0-4.6F
		6.3	YH1.5WD-4.8/12	TDF-0-4.6F	TDP-0-4.8F		
		10.5	YH1.5WD-7.6/19	TBP-0-7.6	TBP-0-7.6F	TCB-0/7.6	TDP-0-7.6F
		10.5	YH1.5WD-8/19	TDF-0-7.6F	TBP-0-8F		

三相组合式避雷器典型技术参数表 Technical Parameters Of Three Phase Modular Lighting Arrester

用途 Application	系统标称电压 System nominal voltage kV	标准型号 Type	额定电压 Rated voltage kV	无间隙型 Gapless arrester			有间隙型 Gapless		标称残压 Residual voltage kV		2000μs方波通流容量 2000μs Square wave through discharge A
				持续运行电压 Continuous operation voltage kV	直流电压 DC Continuous operation voltage kV	0.75倍直流1mA电压下泄漏(μa) DC Continuous operation voltage kV	工频放电电压有效值不小于 Power frequency sparkover voltage kV	1.2/50冲击放电电压峰值不大于 1.2/50 Simpulse dischargevoltage (peak value) kV	8/20雷电冲击电流下峰值不大于 8/20 Lighting impulse current	30/60操作冲击电流下峰值不大于 30/60 Switching current impulse	
				相对相/相对地(仅一个数字表示相间和对地参数相同)							
S型 配电用 For power distribution	3	YH5WS-5/15 x 5/15	5	4.0	8.0/7.5	50	-	-	15.0	12.8	100
	3	YH5CS-3.8/15 x 3.8/13.5	3.8	-	-	-	9.0	15.0/13.5	15.0/13.5	11.4/10.2	100
	6	YH5WS-10/30 x 10/30	10	8.0	16.0/15.0	50	-	-	30.0	23.0	100
	6	YH5CS-7.6/27 x 7.6/24.5	7.6	-	-	-	16.0	27.0/24.5	27.0/24.5	22.5/20.4	100
	10	YH5WS-17/50 x 17/50	17	13.6	26.5/25.0	50	-	-	50.0	38.3	100
	10	YH5CS-12.7 x 12.7/41	12.7	-	-	-	26.0	45.0/41.0	45.0/41.0	38.4/35.0	100
Z型 电站用 For Transformer substationh	3	YH5WZ-5/13.5 x 5/13.5	5	4.0	7.5/7.2	50	-	-	13.5	11.5	150
	3	YH5CZ-3.8/12 x 3.8/12	3.8	-	-	-	8.0	12.0	12.0	10.2	150
	6	YH5WZ-10/27 x 10/27	10	8.0	15.0/14.4	50	-	-	27.0	23.0	150
	6	YH5CZ-7.6/24 x 7.6/24	7.6	-	-	-	16.0	24.0	24.0	20.4	150
	10	YH5WZ-17/45 x 17/45	17	13.6	25.0/24.0	50	-	-	45.0	38.3	150
	10	YH5CZ-12.7/41 x 12.7/41	12.7	-	-	-	26.0	41.0	41.0	35.0	150
	35	YH5WZ-51/150 x 51/134	51	40.8	84/73	50	-	-	150/134	134/114	400
	35	YH5CZ-42/124 x 42/124	42	-	-	-	80	124	124	105.4	400
R型 电容用 For Capacitance	3	YH5WR-5/13.5 x 5/13.5	5	4.0	7.5/7.2	50	-	-	13.5	10.5	400
	3	YH5CR-3.8/12 x 3.8/12	3.8	-	-	-	80	12.0	12.0	9.6	400
	6	YH5WR-10/27 x 10/27	10	8.0	15.0/14.4	50	-	-	27.0	21.0	400
	6	YH5CR-7.6/24 x 7.6/24	7.6	-	-	-	16.0	24.0	24.0	19.5	400
	10	YH5WR-17/46 x 17/46	17	13.6	25.0/24.0	50	-	-	46.0	35.0	400
	10	YH5CR-12.7/41 x 12.7/41	12.7	-	-	-	26.0	41.0	41.0	33.0	400
	35	YH5WR-51/150 x 51/134	51	40.8	84/73	50	-	-	150/134	122/105	400
	35	YH5CR-42/124 x 42/124	42	-	-	-	80	124	124	100	400
D型 发电机用 For generator	3.15*	YH5WD-4/11.5 x 4/9.5	4	3.15	7.0/5.7	50	-	-	11.5/9.5	9.4/7.6	400
	3.15*	YH5CD-3.8/9.5 x 3.8/9.5	3.8	-	-	-	7.5	9.5	9.5	7.6	400
	6.3*	YH5WD-8/23 x 8/18.7	8	6.3	14.0/11.2	50	-	-	23.0/18.7	18.7/15.0	400
	6.3*	YH5CD-7.6/18.7 x 7.6/18.7	7.6	-	-	-	15.0	18.7	18.7	15.0	400
	10.5*	YH5WD-13.5/38 x 13.5/31	13.5	10.5	23.2/18.6	50	-	-	38.0/31.0	31.0/25.0	400
	10.5*	YH5CD-12.7/31 x 12.7/31	12.7	-	-	-	25.0	31.0	31.0	25.0	400
D型 电动机用 For Motor	3.15*	YH2.5WD-4/11.5 x 4/9.5	4	3.15	7.0/5.7	50	-	-	11.5/9.5	9.4/7.6	200
	3.15*	YH2.5CD-3.8/9.5 x 3.8/9.5	3.8	-	-	-	7.5	9.5	9.5	7.6	200
	6.3*	YH2.5WD-8/23 x 8/18.7	8	6.3	14.0/11.2	50	-	-	23.0/18.7	18.7/15.0	200
	6.3*	YH2.5CD-7.6/18.7 x 7.6/18.7	7.6	-	-	-	15.0	18.7	18.7	15.0	200
	10.5*	YH2.5WD-13.5/38 x 13.5/31	13.5	10.5	23.2/18.6	50	-	-	38.0/31.0	31.0/25.0	200
	10.5*	YH2.5CD-12.7/31 x 12.7/31	12.7	-	-	-	25.0	31.0	31.0	25.0	200
电机中性点保护	6.3	YH1.5WD-4.6-12	4.6	3.8	6.8	50	9	12	12	10	250
	6.3	YH1.5WD-4.8-12	4.6	3.8	6.8	50	9	12	12	10	250
	10.5	YH1.5WD-7.6/19	7.6	6.4	11.4	-	15	19	19	15.9	250
	10.5	YH1.5WD-8/19	8.0	6.4	11.4	-	15	19	19	15.9	250

三相组合式过电压保护器
Three-phase Integrated Over-voltage Protector

10kV及以下柜内用TBP-85型TBP-85 type up to and include 10kV used in cabinet

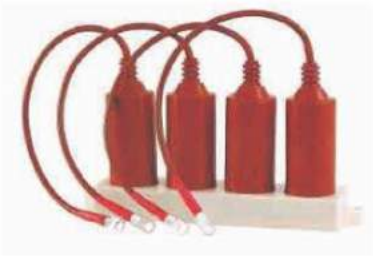

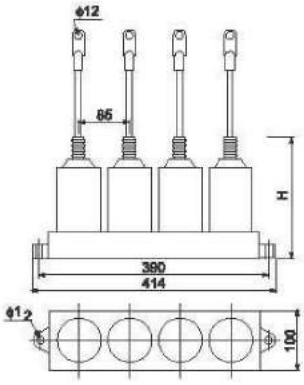

产品类型 Type	高度H Hight (mm)
10kV有间隙with gap	240
6kV有间隙with gap	220
10kV有间隙without gap	220
6kV有间隙without gap	200

10kV及以下户外用TBP-100W1型TBP-100W1 type up to and include 10kV used in outdoors

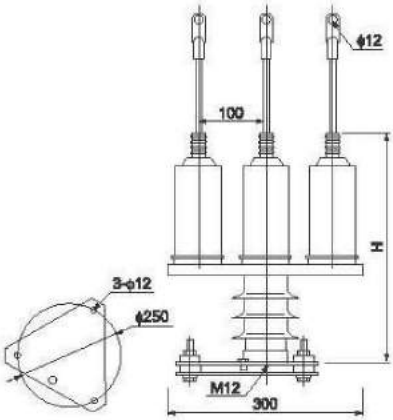

产品类型 Type	高度H Hight (mm)
10kV有间隙with gap	390
6kV有间隙with gap	390
10kV有间隙without gap	370
6kV有间隙without gap	350

10kV及以下柜内用TBP-131型 TBP-131 type up to and include 10kV used in cabinet

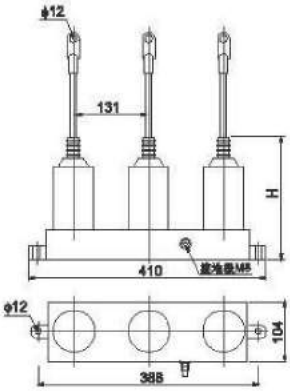

产品类型 Type	高度H Hight (mm)
10kV有间隙with gap	240
6kV有间隙with gap	220
10kV有间隙without gap	220
6kV有间隙without gap	200

三相组合式过电压保护器
Three-phase Integrated Over-voltage Protector

10kV及以下户外用TBP-100W2型 TBP-100W2 type up to and include 10kV used in outdoors

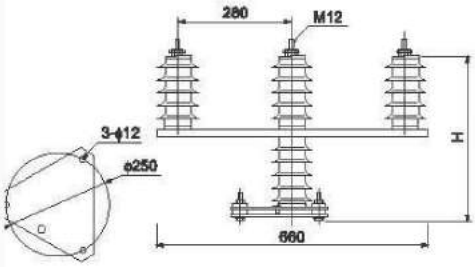

产品类型 Type	高度H Hight (mm)
10kV有间隙with gap	400
6kV有间隙with gap	275

电机中性点保护用TBP-150型 TBP-150 type for motor neutral point protection

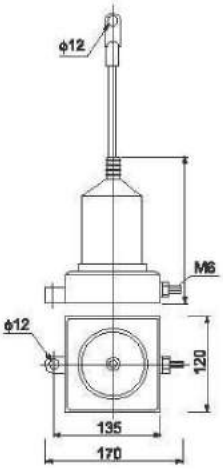

产品类型 Type	高度H Hight (mm)
10kV有间隙with gap	190
6kV有间隙with gap	180

35kV柜内用TBP-200型 TBP-200 type 35kV used in cabinet

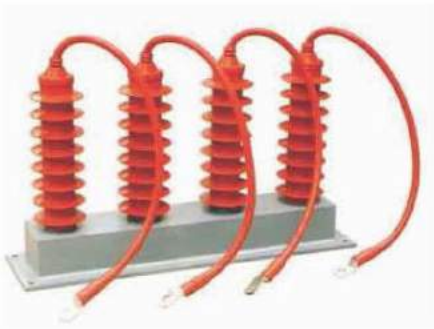

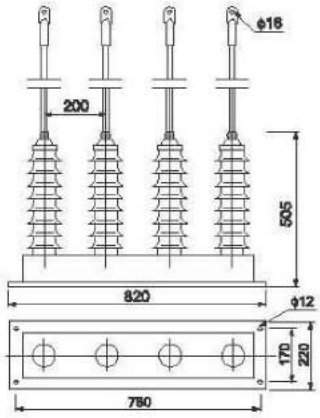

三相组合式过电压保护器
Three-phase Integrated Over-voltage Protector

35kV柜内用TBP-310型 TBP-310 type 35kV used in cabinet

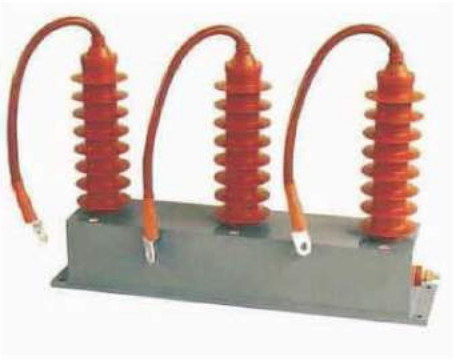

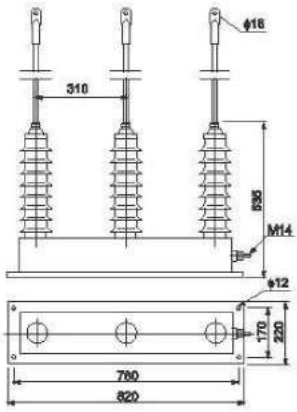

35kV户外用TBP-400W1型 TBP-400W1 type 35kV used outdoors

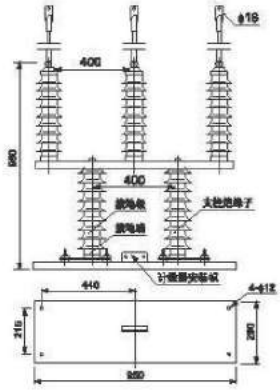

35kV户外用TBP-630W2型 TBP-630W2 type 35kV used outdoors

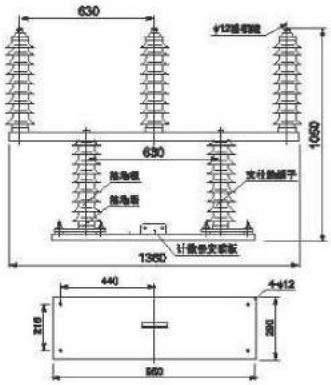

TLB脱离器 TLB Disconnector

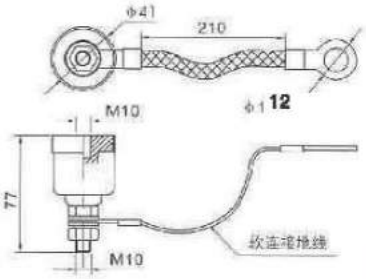

热爆式脱离器及接地线外形尺寸图

概述 General

脱离器作为避雷器的特殊配套产品，与避雷器串联使用，在避雷器出现故障时可迅速动作，将故障避雷器退出电网，同时给出明显的脱离标志，便于维护人员发现故障点，对避雷器进行更换。另一方面，当避雷器正常工作时，脱离器不动作，呈低阻抗，不影响避雷器的保护特性。装设了脱离器的避雷器，才真正实现了安全免维护使用，方便可靠。欧美、日本等发达国家和地区电网中运行的配电型、电站型、线路型避雷器均普遍配套使用脱离器。

我公司脱离器采用新型热爆设计，具有响应快、无误动作的优点，可以与3kV以上各种型号的避雷器配套使用。使用条件与避雷器相同。

As a special supporting product for arrester, the disconnector is series connected with arrester. When the arrester comes across any fault, it would operate quickly and let the failed arrester disconnect from the power grid, meanwhile, it would give obvious disconnection symbol, so that the maintenance personnel would find the point of failure and change the arrester in time. On the other hand, when the arrester works normally, disconnector does not work and is under low impedance state, it would not affect the protective characteristics of arrester. The arresters that have been equipped with disconnectors really realize safe operation, maintenance free, convenient and reliable performance. It is popular to use disconnectors for distribution type, power station type and line type arresters in power grid in Japan, occident countries and other developed countries and districts.

The disconnectors produced by out company adopt the latest thermal-explosion design, with advantages of fast response and misoperation free, can be equipped with arresters of various models of 3kV above, having the same operating conditions with that of arresters.

脱离器典型安-秒特性参数表 Typical Ampere-Second Characteristic Parameters Of Disconnector

电流Current (A)	800	200	20	5	0.5	0.05
动作时间Operation times (s)	0.01~0.02	0.02~0.05	0.1~0.2	0.5~1.0	20~50	200~500

突出的优点 Outstanding Advantages

a. 动作电流范围广

结合我国电网自身的特点，既可在大的工频故障电流（>50A）下脱离，也能在小的故障电流（50mA）小脱离。

b. 脱离速度快

可与断路器的重合闸功能相配合，不仅适用各种电压等各种类型的避雷器，也适用于不同的接地系统（中性点接地和接地系统）

c. 耐冲击能力强

在2ms方波及4/10μs 大电流冲击下均不动作。

d. 未爆脱前机械强度高，密封性能好

TLB-5型可与35kV以下避雷器配套，TLB-6型可与35-220kV避雷器配套适用。

e. 便于安装和更换

螺纹式外置接口，与避雷器串接可靠方便，脱离器一旦动作更换极为方便。

a. Wide range of operating current

Considering the features of power networks in china, disconnection available not only under heavy power frequency fault current (>50A)but also under light fault current (50mA)

b. High disconnection speed

Supportable with the reclosing function of the disconnector, not only applicable for various types of arrester on all voltage grades but also for all types of earthing systems (neutral earthing and non-earthig systems)

c. Strong impulse resistance abilities

Not operating under the square wave of 2ms and heavy current of 4/10μs

d. High mechanical strength and sealing performances before blasting

TLB-5 type can match with arresters of 35kV or under.TLB-6 type can match with arrester of 35 to 220kV

e. Easy Installation and replacement

Screw-thread external interface, reliable and convenient serial connection with arrester ,extremely easy for replacement of disconnector after operating

脱离器安装示意图 Installation Schematic Diagram Of Disconnector

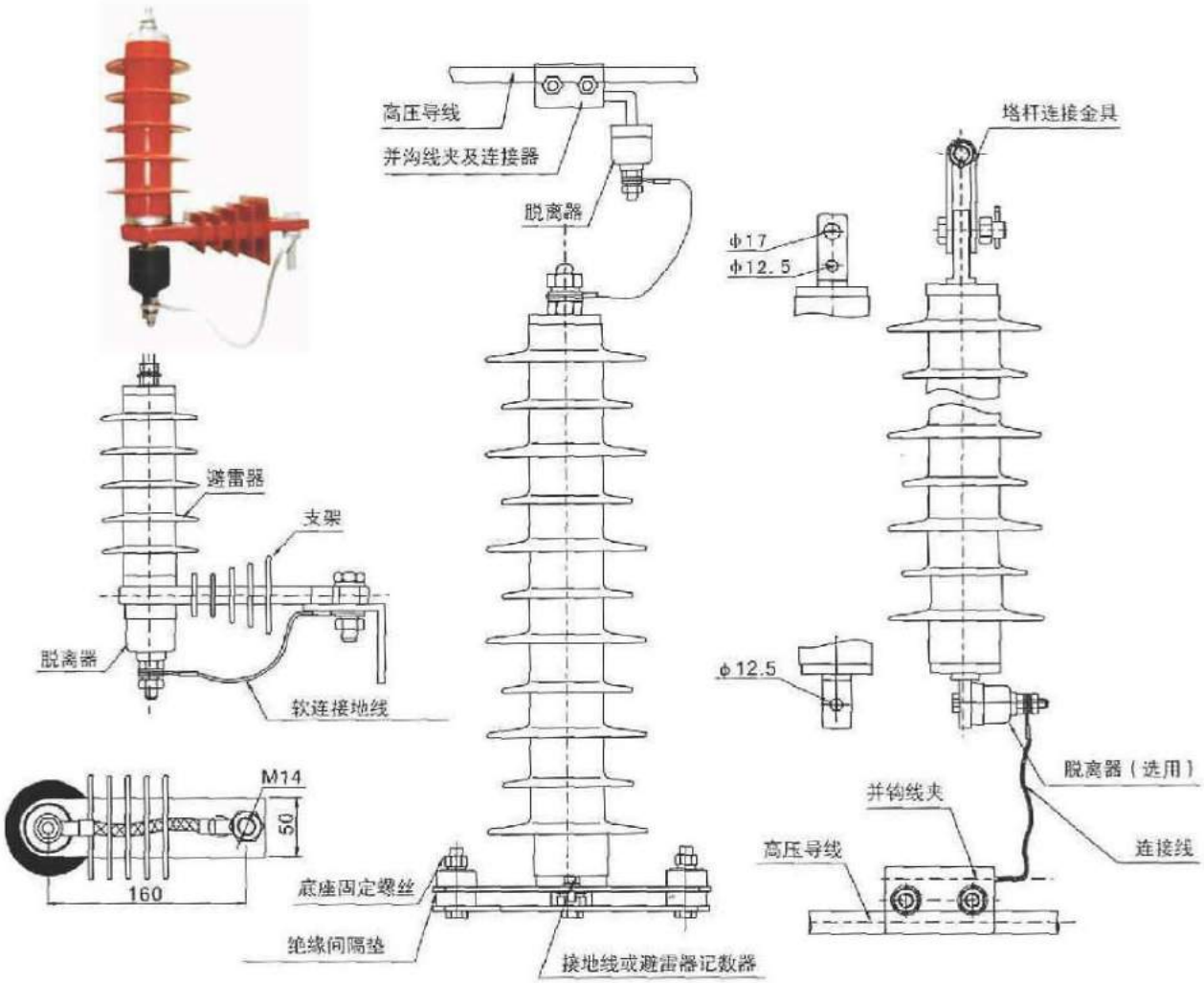

35kV以下脱架式安装图　　电站型座桩安装图　　线路型悬挂式安装图

注：1.脱离器常规安装方式见上图，特殊条件也可以根据实际情况采用其它安装方法。

2. 脱离器详细说明及用法请参阅我公司专门的脱离器使用说明书。若避雷器配套脱离器，在其标准型号后加"L"字母表示。例如：YH5WS-17/50-L表示在YH5WS-17/50避雷器上加装了脱离器。

Note: 1. See above diagram for conventional mounting mode of disconnector, other mounting methods also can be used for special conditions according to the actual conditions.

2. Please refer to our operating manual of disconnector for detailed description and direction of disconnector. "L" followed the standard model means that the arrester has been equipped with disconnector. For example, YH5WS-17/50-L means that the arrester YH5WS-17/50 has been with disconnector.

放电计数器、监测器 Discharging Counter、monitor

概述General

JS-8、JSY-8型避雷器监测器(以下简称计数器）是串联在避雷器下面。用来记录避雷器动作次数的一种装置，适用于6kV-220kV电压等级；使用地点的环境条件与相连接的避雷器相同，海拔高度不超过4000米，环境温度为-40℃- +40℃。它不适用于有严重腐蚀金属及绝缘件的气体，有严重污染和有剧烈振动的地方。

JS-8、JSY-8 discharging counter(hereinafter short as"counter")is connected under the arrester in serial.It is used for recoding the operation times of arrester,JS8 type is applied for 6kV-220kV arrester. The environment condition shall meet the requirement required by arrester,for example,the altitude doesn't exceed 4000m,the environment is -40℃- +40℃. This counter can't be put in the place that includes gas eroding metal and insulation parts, serious pollution and drastic vibration.

结构和性能 Structure and Characteristic

放电计数器主要由阀片，硅桥式整流器，电容器，电磁计数器等元件组成。它利用通过避雷器的能量(冲击电流和工频电流)，在阀片(非线性电阻)上取压，经硅桥式整流器，单向对电容器充电，并以直流对电磁计数器线圈放电而使计数器吸动一次，既记录一次来实现记录动作次数。

Discharging counter is made up of valve element, silicon bridge type rectifier ,capacitor, electromagnetic counter and so on. It makes use of the arrester energy (surge current and power frequency current) to fetch the voltage on valve element(non linear resistance), then it charges to the capacitor in single direction through silicon bridge type rectifier, makes the coils of electromagnetic counter discharge with form of DC power to move the counter ,thus ,it can realize that the operating times can be recorded.

JS-8标准型

JCQ监测标准型

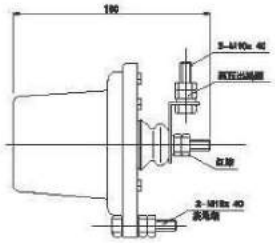

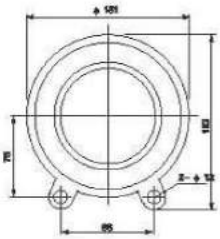

计数器详细说明及用法请参阅我公司专门的计数器使用说明书。若避雷器配套计数器，在其标准型号后加“J”字母表示(带附加电流监测功能的产品用字母“JCQ”表示）。例如：YH5WS-17/50-J表示在YH5WS-17/50避雷器上加装了计数器。

监测器主要由阀片，整流器，电容器，电阻，电感，触发电路，计数电路，电磁计数量，磁电式指针电表，电流测量与转换电路，构件及壳体等部分组成。正常使用情况下，避雷器的泄露电流，直接由磁电式指针仪表显示表示出来，指示范围分为两档：0-5mA及0-2mA自动换挡并有灯显示，在0-10mA档时，发光管亮。避雷器动作时，电磁计数器加计数，显示器满度后，自动回零继续累加计数，无限循环工作，不清零。

The monitor is made up of silicon bridge type varistor ,capacitor, resistors electromagnetic counter and so on, It use of the arrester energy (surge current and power frequency current) to fetch the voltage on valve element (non linear resistance),then it charges to the capacitor n single direction through silicon bridge type rectifier, makes the coils of electromagnetic counter discharge with form of DC power to move the counter ,thus, it can realize that the operating times can be recorded.

常户外盘式计数器典型技术参数表 The typical technical parameters of common outdoor pannel counter

典型型号 Typical model	产品描述 Product's description	系统电压等级 Voltage grade of system	标称放电电流 Nominal Discharge current (kV)	动作电流范围 Motion current Range (kA)	标称电流下附加残压 Additional residual Voltage under Nominal current (kV)	2ms方波通流容量 2ms Sqare wave discharge Capacity (A)	4/10大电流耐受 High Current Withstand (kA)
JS-8	普通计数器 Common counter	3-66kV	5	50-5000	1	400	65
JCQ-Ⅱ	电流型在线监测器 Current type On-line monitor	3-220kV	10	50-5000	1	600	100

绝缘安装支架 Insulating Mounting Bracket

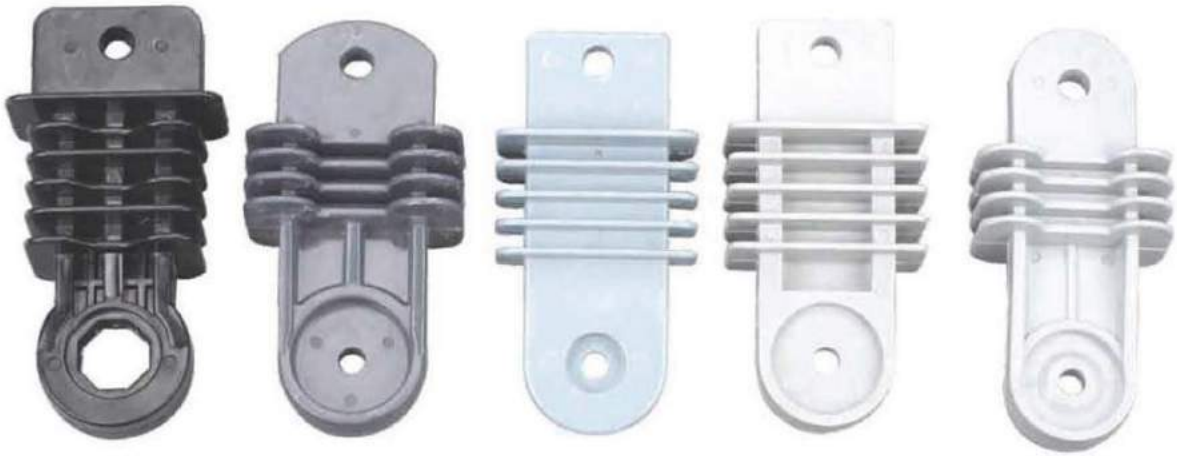

安装方式说明 Installation Method Instruction

1. 36kV以下电压等级避雷器采用绝缘托架安装。即避雷器用绝缘托架固定在原避雷器安装位置上，将脱离器装与避雷器下端接线端子上。接地线采用编织软铜线，长度约250mm，以保证避雷器本体分离后有足够的绝缘距离。需要注意的是选择复合外套避雷器，切勿用常规的金属包箍安装方式，以免对避雷器的径向电场造成影响，产生事故隐患。

2. 35-110kV电站型避雷器(座式安装)，脱离器通过线夹与高压导线连接，脱离器与避雷器通过编织软铜线（长度约300~600mm、截面积20mm²)相连接。

3. 35-200kV线路无间隙避雷器(包括保护电缆和电站型悬挂安装)，脱离器直接安装在避雷器下端子上，通过由10的硬铝导线与高压线连接，根据电压等级的不同，硬铝导线长度为300~900不等，采用硬铝导线可有效防止脱离器脱离后，连接线自身发生摇摆，产生新故障隐患。

4. 脱离器的上螺孔和下端尺寸可根据避雷器接线端子尺寸和有关规程灵活改变。

1. Arresters with the Voltage grades of 36kV or under shall be installed with insulation bracket. That's to say , the arrester is fixed to the intended installation place with the insulation bracket and the disconnector is installed on the lower connector terminals of the arrester . The earth connection applies weaved annealed copper wire with the length of about 250mm to ensure enough insulation distance when departing from the arrester body. Attention shall be paid that composite casting arrester shall be selected without the general installation method of metal shrounding ring to avoid effects caused on the radial electric field of the arrester and cause the hidden dangers of accidents.

2. For plant type arresters of 35~110kV(seat type installation), the disconnector shall be connected with high voltage connecting wires by clips. The disconnector and arrester shall be connected with weaved annealed copper wire(with the length of about 300-600mm and cross -sectional area of 20mm²)

3. For circuit type arresters without gaps of 35~220kV (including protective cable and power plant type suspension installation), the disconnector shall be installed directly on the lower terminal of the arrester and connected with the high voltage wire with duralumin wire of ϕ10.The lengths of the duralumin wire range from 300to 900mm according to different voltage grades. The duralumin wire can make effective prevention on the self swinging of connecting wire after the disconnection and avoid new hidden accident dangers.

4. The upper screw and lower dimension of the disconnector can be adjusted flexibly according to the connector terminal dimension of the arrester and relevant regulations.

YH10W,YH5W出口型复合氧化锌避雷器 Zinc Oxide Lighting Arrester (export Type)

用途说明 Usage& Feature

氧化锌避雷器是交流电力系统的电气设备免受大气过电压和操作过电压危害的保护设备。

The Zinc Oxide lighting arrester protects the electrical equipments in AC power systems against being damaged by atmos-pheric over-voltage and operational over-voltage.

5kA无间隙避雷器 Nominal Discharge Current 5kA Metal-oxide Lightning Arrester Without Gaps(export)

型号 Type	额定电压 Rated voltage kV(rms)	最大持续运行电压 Maximum continuous operation voltage kV(rms)	残压 Max. Residual voltage			方波冲击电流耐受 2000μs Square wave current impulse withstand A(crest)	大电流耐受 4/10μs High current impulse kA(crest)
			陡波冲击电流 Steep current impulse kV(crest)	30/60 μs 操作冲击电流 Switching current impulse kV(crest)	8/20 μs 雷电冲击电流 Lightning current impulse kV(crest)		
YH5W-3	3	2.55	9.5	7.7	8	100	65
YH5W-6	6	5.1	19.0	15.4	18	100	65
YH5W-9	9	7.65	28.5	23.1	27	100	65
YH5W-10	10	8.3	38.0	27.0	30	100	65
YH5W-11	11	9.5	38.5	30.0	33	100	65
YH5W-12	12	10.2	38.0	30.8	36	100	65
YH5W-15	15	12.7	47.5	38.5	45	100	65
YH5W-18	18	15.3	57.0	46.2	54	100	65
YH5W-21	21	17.0	66.5	53.9	63	100	65
YH5W-24	24	19.5	76.0	61.6	72	100	65
YH5W-27	27	21.9	85.5	69.3	81	100	65
YH5W-30	30	24.4	95.0	76.5	90	100	65
YH5W-33	33	26.8	104.0	84.7	99	100	65
YH5W-36	36	29.0	114.0	92.7	108	100	65
YH5W-42	42	34.1	132.3	100.1	126	100	65

Y5C,Y10C出口型串联间隙氧化锌避雷器
Porcelain Lighting Arrester(export Type)

5kA串联间隙避雷器 Nominal discharge current 5kA porcelain housed metal-oxide lightning arrester with series gap(export)

型号 Type	额定电压 Rated voltage kV(rms)	最大持续运行电压 Maximum continuous operation voltage kV(rms)	放电电压 Sparkover voltage(kV)		8/20 μs 雷电冲击电流 Lightning current impulse kV(crest)	方波冲击电流耐受 2000μs Square wave current impulse withstand A(crest)	大电流耐受 4/10μs High current impulse kA(crest)
			工频 Power frequency > kV(r.m.s)	1.2/50 μs 雷电冲击 Lightning current > kV(crest)			
Y5C-3	3	2.55	5.0	7.8	9	100	65
Y5C-6	6	5.1	10.0	15.5	18	100	65
Y5C-9	9	7.65	15.5	24.5	27	100	65
Y5C-10	10	8.4	18.0	27.2	30	100	65
Y5C-12	12	10.2	21.0	32.6	36	100	65
Y5C-15	15	12.7	25.0	38.8	45	100	65
Y5C-18	18	15.3	31.0	48.1	54	100	65
Y5C-21	21	17.0	34.0	52.7	63	100	65
Y5C-24	24	19.2	39.0	60.5	75	100	65
Y5C-27	27	21.9	45.0	69.8	81	100	65
Y5C-30	30	24.4	50.0	77.5	90	100	65
Y5C-33	33	26.8	55.0	85.3	99	100	65
Y5C-36	36	29.0	60.0	93.0	108	100	65
Y5C-42	42	34.1	70.0	108.5	126	100	65

10kA串联间隙避雷器 Nominal Discharge Current 10kA Porcelain Housed Metal-oxide Lightning Arrester with series gap(export)

型号 Type	额定电压 Rated voltage kV(rms)	最大持续运行电压 Maximum continuous operation voltage kV(rms)	放电电压 Sparkover voltage(kV)		8/20 μs 雷电冲击电流 Lightning current impulse kV(crest)	线路放电等级 Line discharge class	大电流耐受 4/10μs High current impulse kA(crest)
			工频 Power frequency > kV(r.m.s)	1.2/50 μs 雷电冲击 Lightning current > kV(crest)			
Y10C-3	3	2.55	5.0	7.8	9	1	100
Y10C-6	6	5.1	10.0	15.5	18	1	100
Y10C-9	9	7.65	18.5	24.5	27	1	100
Y10C-10	10	8.40	18.0	27.2	30	1	100
Y10C-12	12	10.2	21.0	32.6	36	1	100
Y10C-15	15	12.7	25.0	38.8	45	1	100
Y10C-18	18	15.3	31.0	48.1	54	1	100
Y10C-21	21	17.0	34.0	52.7	63	1	100
Y10C-24	24	19.2	39.0	60.5	75	1	100
Y10C-27	27	21.9	45.0	69.8	81	1	100
Y10C-30	30	24.4	50.0	77.5	90	1	100
Y10C-33	33	26.8	55.0	85.3	99	1	100
Y10C-36	36	29.0	60.0	93.0	108	1	100
Y10C-42	42	34.1	70.0	108.5	126	1	100

备注：“Y”型号为复合外套氧化锌避雷器，如果是瓷套避雷器，删去掉型号的“YH”
Note: “Y” is the polymeric housing metal oxide Lighting arrester, if it is porcelain housing, then without “YH”