# FZ(R)N61-12 小型化真空负荷开关

# FZ(R)N61-12 Miniaturized Vacuum Load Break Switch

## 产品概述 Overview

• FZN61-12D/630-20 及 FZN61-12D/1250-25 型户内交流高压小型化真空负荷开关是额定电压为 12kV，额定频率为 50Hz 的三相高压开关设备，用于分合负荷电流，闭环电流，空载变压器和电缆充电电流，关合短路电流。顶部配装隔离开关及底部接地开关的三工位小型化真空负荷开关，可以承受短路电流。

• FZRN61-12DG/200-31.5 型交流高压小型化真空负荷开关熔断组合电器，是 FZRN61-12DG 小型化负荷开关与 S□LAJ-12 (XRNT□-10) 高压限流式熔断器组合在一起的户内高压开关设备。它可以开断直至短路电流的任何电流；负荷开关开断工作电流，熔断器开断电流，联合开断工作电流与全短路电流之间的任何电流，同时熔断器通过其撞击使负荷开关分闸。

• FZN61-12DG/630-20 and FZN61-12DG/1250-25 indoor AC high voltage miniaturized vacuum load break switches are three-phase high voltage switch equipment with rated voltage of 12kV and rated frequency of 50Hz, are used to switch load currents, closed loop current, no-load transformer and cable charging current, and make short circuit current. The three-position miniaturized vacuum load break switch equipped with an disconnect switch at the top and a earth switch at the bottom can withstand short-circuit current.

• FZRN61-12DG/200-31.5 AC high voltage miniaturized vacuum load break switch-fuse combination unit is indoor high voltage switch equipment, combines of FZRN61-12DG miniaturized load break switch and S□LAJ-12 (XRNT□-10) high voltage current-limiting fuse. It can break any current up to the short-circuit current; the load break switch breaks the working current, the fuse breaks the current, and the joint breaks any current between the working current and the full short-circuit current. At the same time, the fuse opens the load break switch through its strike.

## 型号及含义 Type Description

真空隔离负荷开关 Vacuum disconnect load break switch

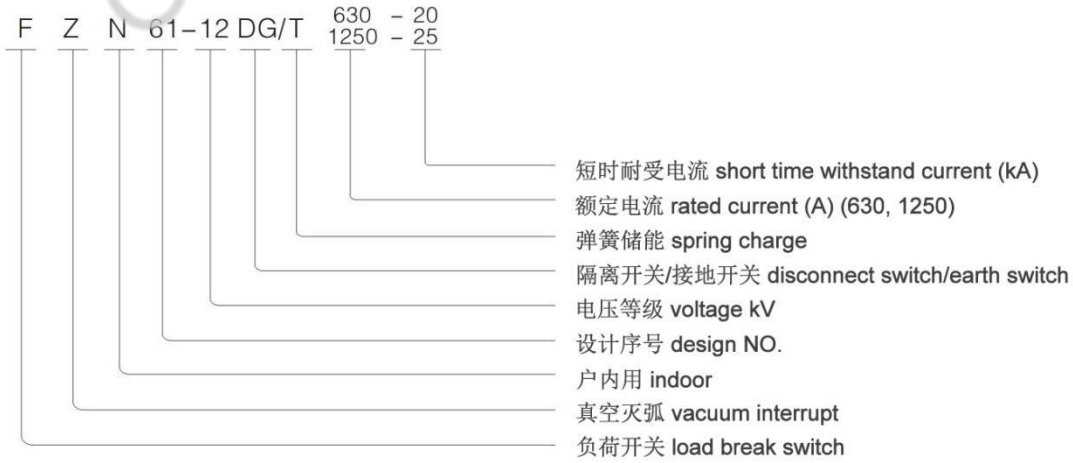


真空隔离负荷开关-熔断器组合电器 Vacuum disconnect load break switch-fuse combination unit

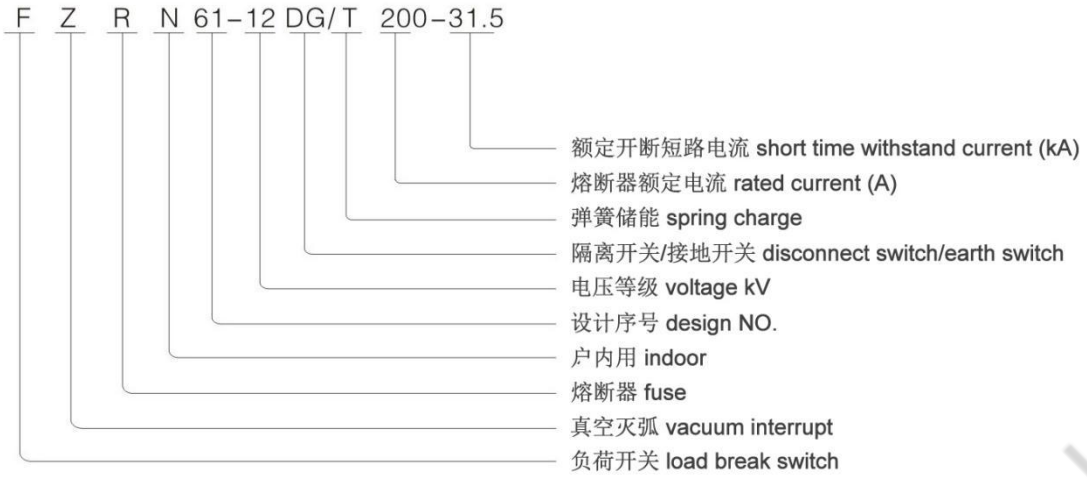


## 使用环境条件 Use Conditions

- 周围空气温度：-30℃~+40℃;
- 海拔高度不超过 1000m；海拔高度 3000 以上可定做;
- 相对湿度：日平均值不大于 95%，月平均值不大于 90%；
- 地震烈度不超过 8 度；
- 无火灾、爆炸危险，化学腐蚀及剧烈振动的场所；
- 污秽等级：Ⅱ。
- Ambient air temperature: -30℃~+40℃;
- Altitude: ≤1000m; above 3000m can be customized;
- Relative humidity: daily average ≤95%, monthly average ≤90%;
- Earthquake intensity: ≤8 degree;
- Places without danger of fire and explosion, chemical corrosion and severe vibration;
- Pollution degree: II.

## 技术参数及性能 Technical Parameters and Performance

| NO. | Item | Unit | Vacuum load break switch | | Vacuum load break switch-fuse combination unit FZRN61-12(D)/T200-31.5 |
|---|---|---|---|---|---|
| | | | FZN61-12(D)/T 630-20 | FZN61-12(D)/T 1250-25 | |
| 1 | Rated voltage | kV | 12 | | |
| 2 | Rated frequency | Hz | 50 | | |
| 3 | Rated current | A | 630 | 1250 | 200 |
| 4 | Rated short time withstand current | kA | 20, 25 | | |
| 5 | Rated peak withstand current | kA | 50, 63 | | |
| 6 | Rated short circuit making current | kA | 50 | 63 | 80 |
| 7 | Rated active load breaking current | A | 1250 | | 1250 |

| | | | | |
|---|---|---|---|---|
| 8 | Rated closed loop breaking current | A | 1250 | 1250 |
| 9 | Breaking no-load transformer | kVA | 2000 | |
| 10 | Ground fault current | A | 20 | |
| 11 | Line and cable charging current under ground fault conditions | A | 20 | |
| 12 | Rated short-circuit breaking current | kA | | 31.5/50 (depends on the fuse) |
| 13 | Rated transfer current | A | 3150 | |
| 14 | Fixed opening time | ms | 45 | |
| 15 | Power frequency withstand voltage (1min) | kV | Phase-to-phase, phase-to-earth, across vacuum open contacts: 42, across disconnect open contacts: 48 | |
| 16 | Lightning impulse withstand voltage | kV | Phase-to-phase, phase-to-earth, across vacuum open contacts: 75, across disconnect open contacts: 85 | |
| 17 | Mechanical life | times | >10000 | |

## 产品组装分析图 Product Assembly Analysis Drawing

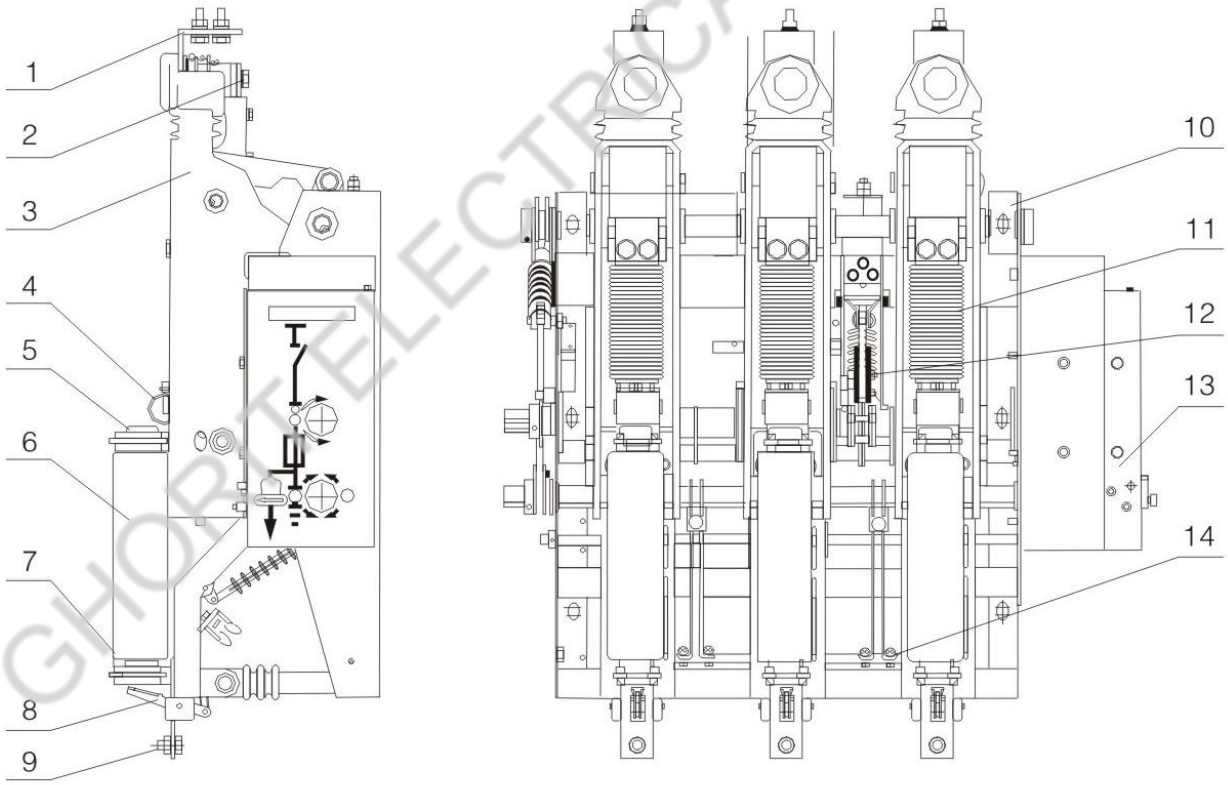


1、上出线 2、隔离开关 3、绝缘座 4、软联接 5、上熔断器夹 6、熔断器
7、下熔断器夹 8、脱扣板 9、下出线 10、金属框架 11、真空灭弧室 12、弹簧机构
13、操作面板 14、接地开关

1. upper outlet 2. disconnect switch 3. insulating base 4. flexible connection 5. upper fuse holder
6. fuse 7. lower fuse holder 8. trip plate 9. lower outlet 10. metal frame 11. vacuum interrupter
12. spring mechanism 13. operating panel 14. earth switch

## 产品结构介绍 Product Structure Introduction

• 真空隔离负荷开关为模块式产品；框架结构: 结构紧凑，集成了隔离开关、真空负荷开关、熔断器、接地开关为一体的高性能高压电器产品。

• 体积小：宽度在分合状态下：真空负荷开关宽度≤299mm。

• 参数高：真空负荷开关额定电流达 1250A；组合电器额定电流达 200A，可保护 2000kVA 的变压器。

• 进线隔离开关与接地开关联动，接地开关分开后则同一动作内进线隔离开关便合上。

• 旋转式隔离开关，分闸后具有可见的断口。

• 真空隔离负荷开关与隔离（接地）开关之间有机械联锁防止误操作。确保隔离开关合闸后方可合真真空负荷开关；真空负荷开关分闸后方可分闸隔离开关。

• 负荷开关可选装电操机构，为电动、手动两用，可实现远距离控制。

• 可选装辅助开关、分励及过流脱扣器。

• 真空负荷开关分合闸速度不受人力操作的大小影响。

• 防误机构满足成套高压设备”五防”的要求。

• The vacuum disconnect load break switch is a modular product; the frame structure: compact structure, integrated disconnect switch, vacuum load break switch, fuse, earth switch as a whole high-performance high voltage electrical products.

• Small size: width in the open and close state: the width of the vacuum load break switch ≤299mm.

• High parameters: the rated current of the vacuum load break switch is up to 1250A; the rated current of the switch-fuse combination unit is up to 200A, which can protect a 2000kVA transformer.

• The incoming line disconnect switch is linked with the earth switch. After the earth switch is opened, the incoming line disconnect switch will be closed in the same action.

• Rotary disconnect switch with visible fracture after opening.

• There is a mechanical interlock between the vacuum disconnect load break switch and the disconnect (earth) switch to prevent misoperation. Ensure that the vacuum load break switch can be closed after the disconnect switch is closed; the disconnect switch can be opened only after the vacuum load break switch is opened.

• The load break switch can be equipped with an electric operating mechanism, which is electric and manual, can realize remote control.

• Optional auxiliary switch, shunt and overcurrent release.

• The opening and closing speed of the vacuum load break switch is not affected by the manual operation.

• The anti-misoperation mechanism meets the requirements of the "five preventions" of the complete set of high voltage equipment.

## 产品外形尺寸图 Product Overall Dimensions Drawing

### 外形尺寸图（右操） Overall dimensions drawing (right operation)

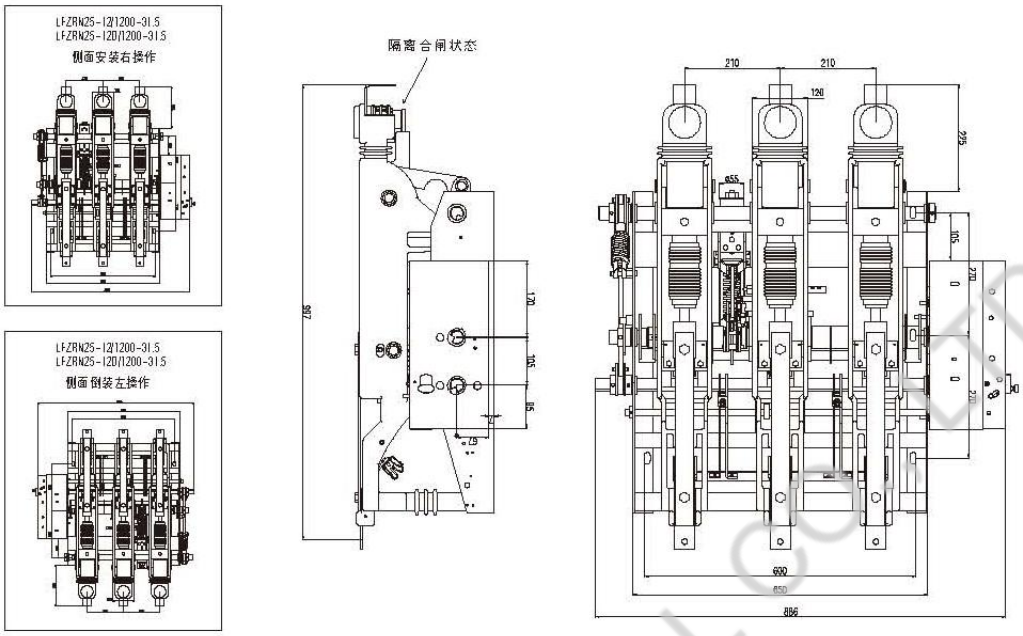


真空隔离负荷开关侧装右操

Vacuum disconnect load break switch side installation right operation

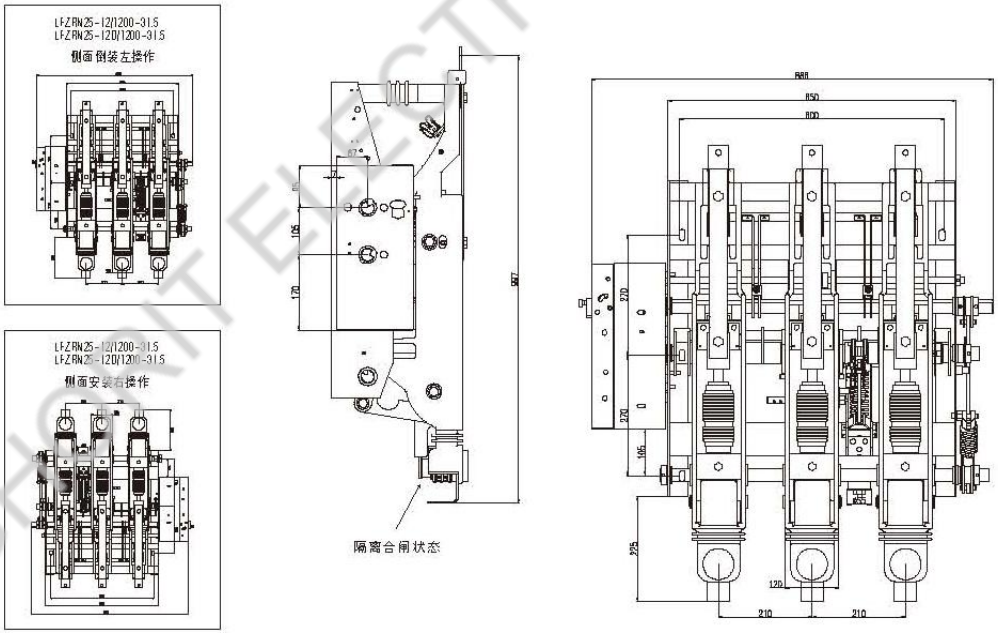


真空隔离负荷开关倒装右操

Vacuum disconnect load break switch upside-down installation right operation

## 外形尺寸图（左操） Overall dimensions drawing (left operation)

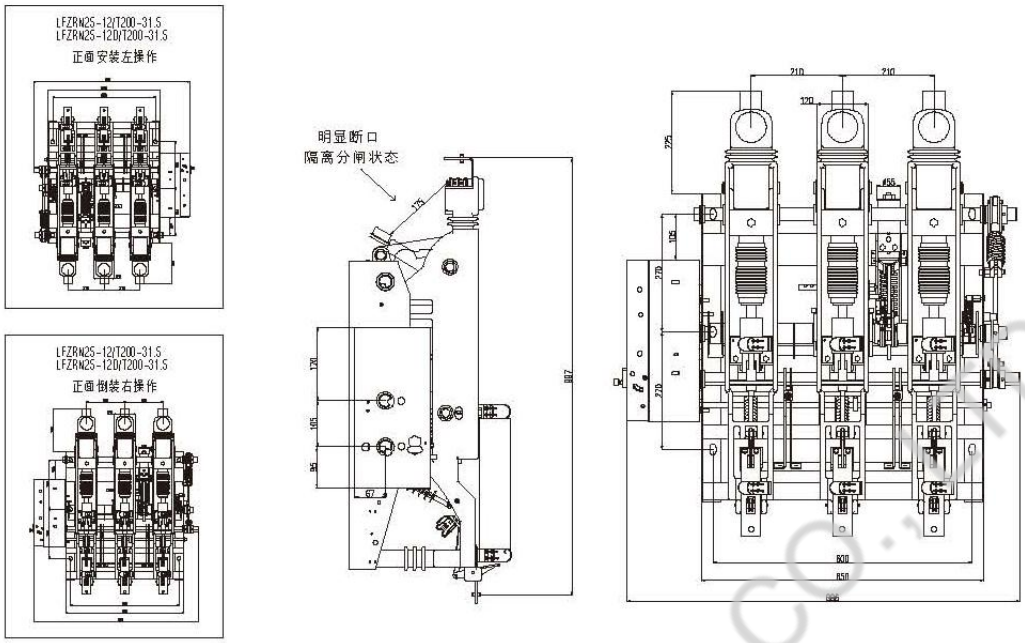


真空隔离负荷开关侧装左操外形尺寸图

Vacuum disconnect load break switch side installation left operation

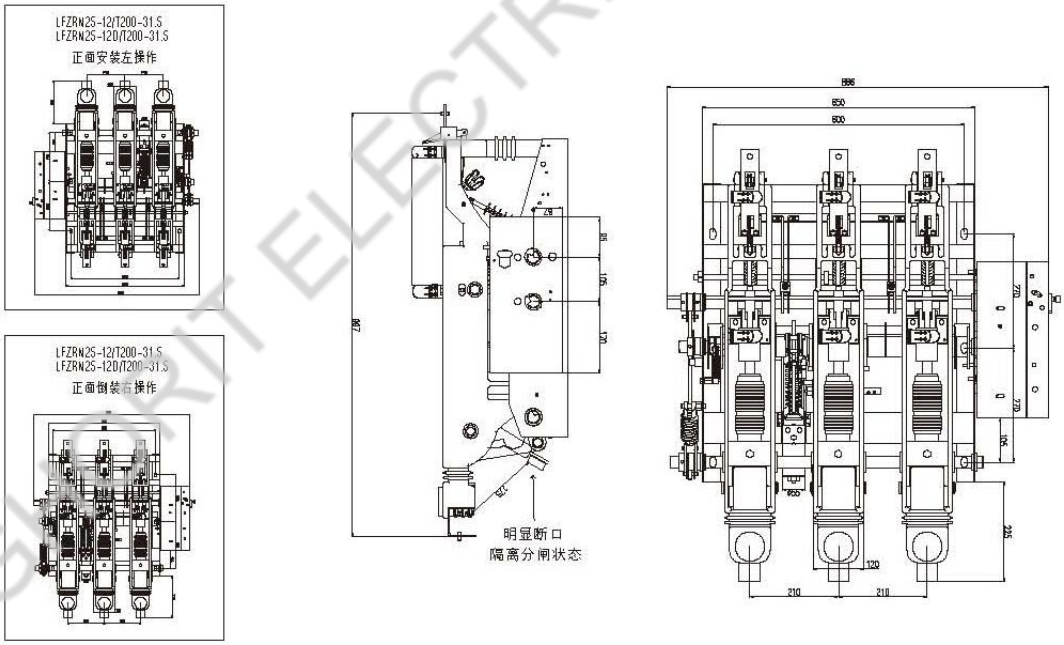


真空隔离负荷开关倒装左操外形尺寸图

Vacuum disconnect load break switch upside-down installation left operation

## 柜门、面板外形尺寸参考图 Reference Drawing of Cabinet Door and Face Panel Overall Dimensions

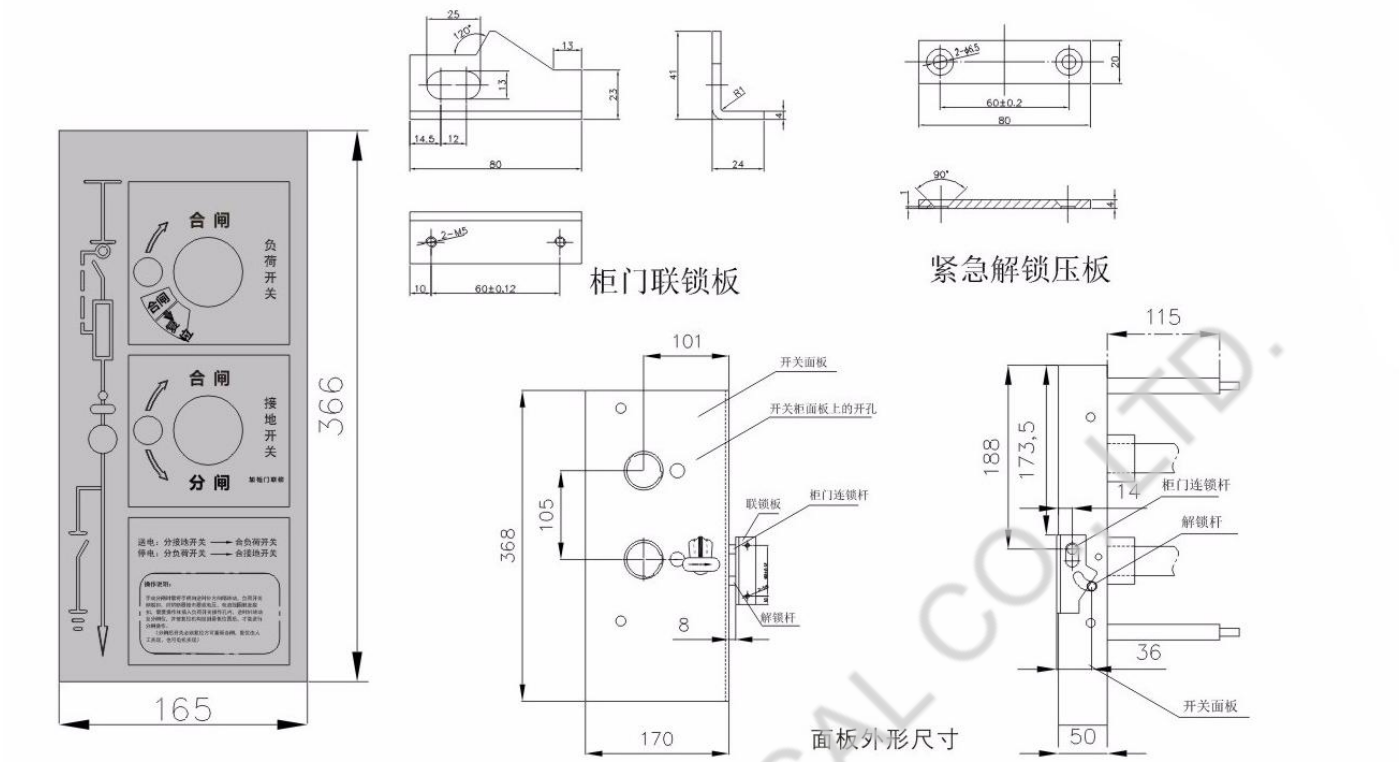


## 真空隔离负荷开关柜体内部配置示意图

## Schematic Diagram of Internal Configuration of Vacuum Disconnect Load Break Switch Cabinet

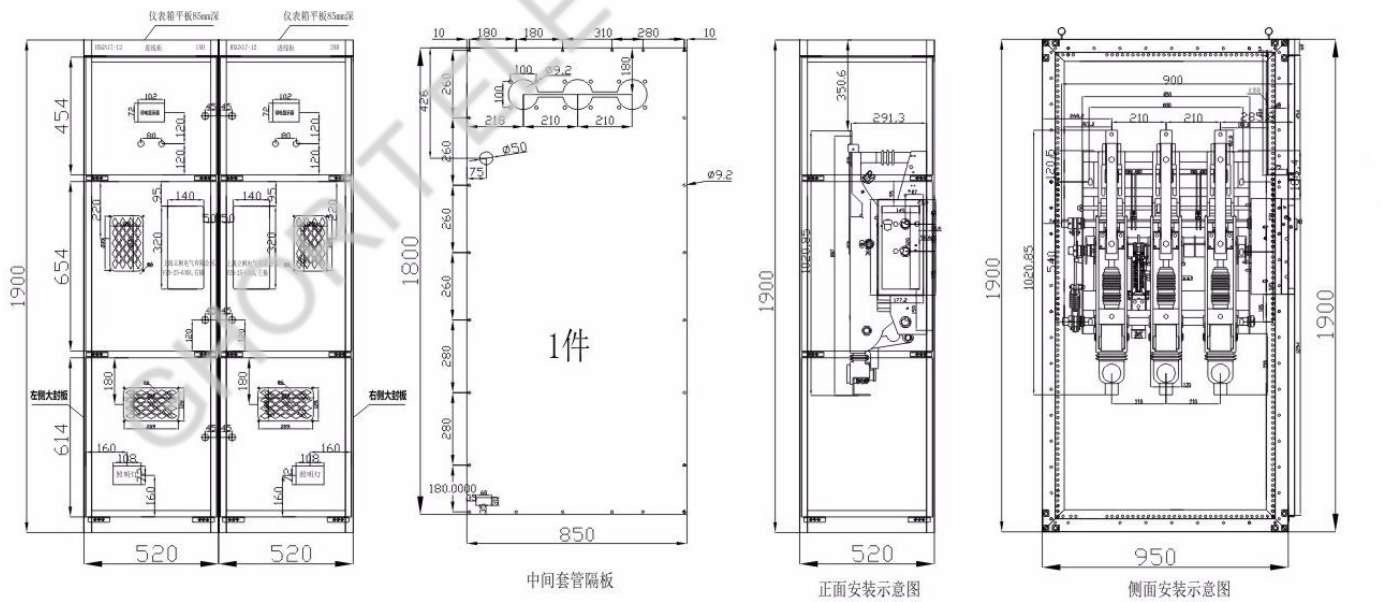

## 产品使用注意事项 Precautions of Product Use

**参照 1 图的负荷开关操作指示牌，说明如下：**

- 隔离开关与接地开关是联动的，隔离开关先分开后接地开关便合上；接地开关分开后隔离开关便合上。
- 开关分合闸操作后请从观察窗确认其各自分合闸状态。

**负荷开关与接地开关的联锁**

- 真空开关分闸后，隔离及接地开关才能操作。
- 隔离开关合闸（接地开关分闸）后，真空开关才能操作。
- 隔离开关分闸（接地开关合闸）后，才能解开柜门闭锁（打开柜门）。
- 关上柜门闭锁（柜门关上）后，接地开关才能分闸。
- 逆时针方向为关上柜门闭锁。
- 顺时针方向为打开柜门闭锁。
- 对熔断器撞击器或电压、电流脱扣器触发脱扣，需用操作手柄插入负荷开关操作孔内，逆时针转动至死点，使储能机构复位后，方可进重新合闸操作（电操开关自动复位）。
- 电操机构可完成合闸、分闸及分闸后储能机构自动复位。
- 真空开关分、合闸操作均由弹簧过死点释能推动，分、合闸速度不受操作者技能和操作力的大小的影响。

**真空开关的操作**

- 顺时针方向为合闸，合到位真空开关指示合。
- 逆时针方向为分闸，分到位真空开关指示分。
- 电操开关由合闸、分闸按钮进行电动操作。

**隔离、接地开关的操作**

- 顺时针方向为隔离开关分闸（接地开关合闸）。
- 逆时针方向为隔离开关合闸（接地开关分闸）。

**B 型柜门闭锁的操作**

**Refer to the load break switch operation indicator in Figure 1, and the instructions are as follows:**

- The disconnect switch and the earth switch are linked. The disconnect switch is first opened and then the earth switch is closed; after the earth switch is opened, the disconnect switch is closed.
- After the switch is opened and closed, please confirm the respective opening and closing status from the observation window.

**Interlock of load break switch and earth switch**

- After the vacuum switch is opened, the disconnect and earth switch can be operated.
- The vacuum switch can only be operated after the disconnect switch is closed (the earth switch is opened).
- After the disconnect switch is opened (the earth switch is closed), the cabinet door lock can be unlocked (open the cabinet door).
- The earth switch can be opened only after the cabinet door is locked (the cabinet door is closed).
- The counterclockwise direction is to close the cabinet door block.
- The clockwise direction is to open the cabinet door block.
- To trigger the tripping of the fuse striker or the voltage and current release, you need to insert the operating handle

into the operating hole of the load break switch, turn it counterclockwise to the dead point, and reset the energy storage mechanism before entering the re-closing operation (electric operation switch is automatically reset).

• The electric operating mechanism can automatically reset the energy storage mechanism after closing, opening and opening.

• The opening and closing operations of the vacuum switch are driven by the spring's dead-point release energy, and the opening and closing speeds are not affected by the operator's skill and operating force.

**Operation of the vacuum switch**

• The clockwise direction is closing, and the vacuum switch indicates closing when closed in place.

• The counterclockwise direction is opening, and the vacuum switch indicates opening when opened in place.

• The electric switch is operated electrically by the closing and opening buttons.

**Operation of disconnect and earth switch**

• In the clockwise direction, the disconnect switch is opened (the earth switch is closed).

• In the counterclockwise direction, the disconnect switch is the closed (the earth switch is opened).

**Operation of B type cabinet door locking**

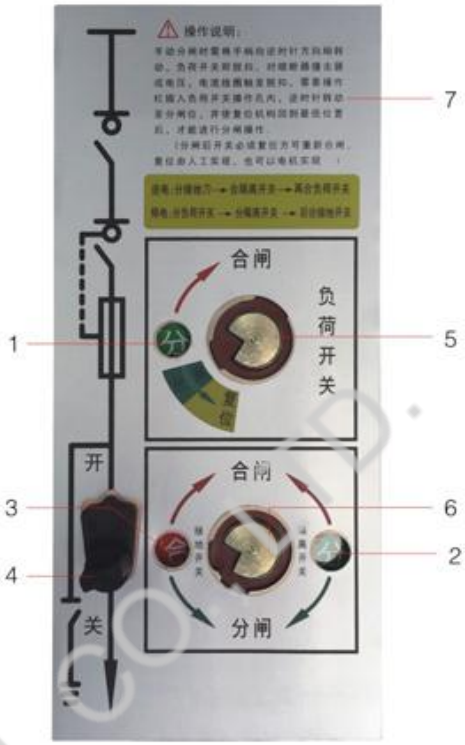


1. vacuum switch open/close indication
2. disconnect switch open/close indication
3. earth switch open/close indication
4. cabinet lock interlock operating handle
5. vacuum switch opening/closing operating handle
6. disconnect switch and earth switch operating handle
7. operation program instruction

Fig. 1

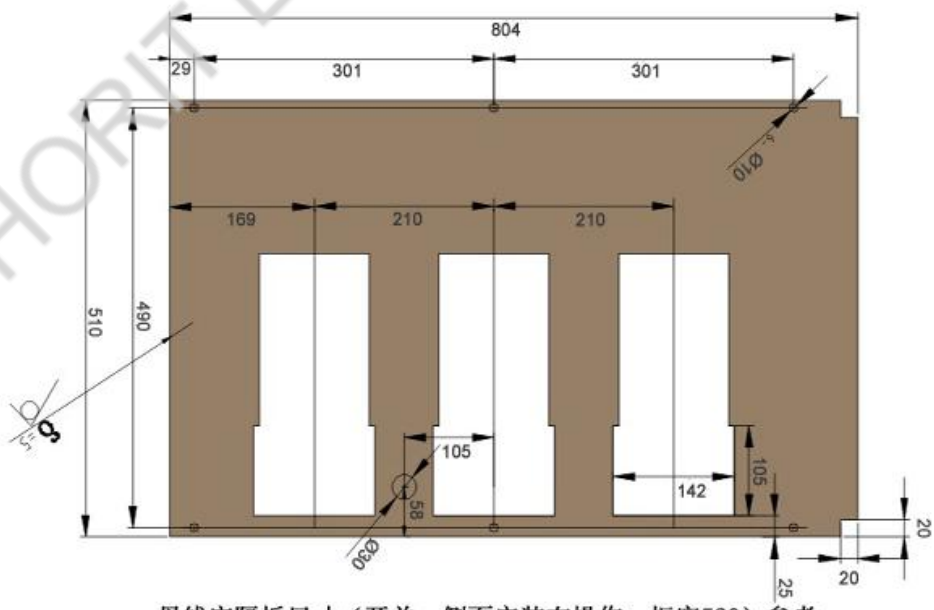


母线室隔板尺寸（开关：侧面安装右操作；柜宽520）参考

注：材料必须采用绝缘防潮材料XMC或DMC

busbar room partition dimensions reference

(switch: side installation right operation; cabinet width520)

Note: must apply insulating moisture-proof material XMC or DMC

## 产品成套柜一次方案图 Switchgear Primary Scheme Diagram

| NO. | | 01 | | 02 | | 03 | | 04 | | 05 | |
|---|---|---|---|---|---|---|---|---|---|---|---|
| Main circuit diagram | | 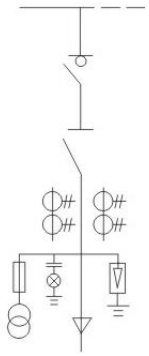 | | 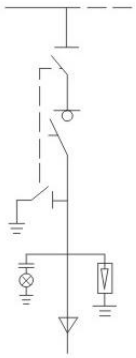 | | 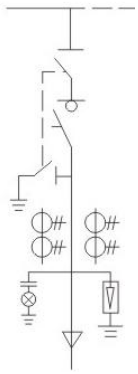 | | 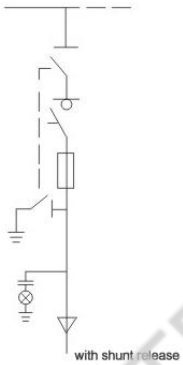 | | 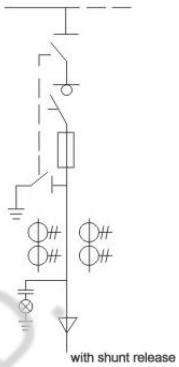 | |
| Switchgear model | | HXGN-12 | | HXGN-12 | | HXGN-12 | | HXGN-12 | | HXGN-12 | |
| Switchgear name | | Cable incoming switchgear | | Cable incoming (outgoing) switchgear | | Cable incoming (outgoing) switchgear | | Transformer outgoing switchgear | | Transformer outgoing switchgear | |
| Main components | Vacuum disconnect load break switch | FZN61-12G | 1 | FZN61-12G | 1 | FZN61-12G | 1 | FZRN61-12DG | 1 | FZRN61-12DG | 1 |
| | Fuse | | | | | | | SF(D)LAJ-12/XXA | 3 | SF(D)LAJ-12/XXA | 3 |
| | CT | LZZBJ9-10 XX/5A | 2 | | | LZZBJ9-10 XX/5A | 2 | | | LZZBJ9-10 XX/5A | 2 |
| | PT | JDZ10-10R 10/0.1 | 1 | | | | | | | | |
| | Charged display | DXN-10Q | 1 | DXN-10T | 1 | DXN-10T | 1 | DXN-10T | 1 | DXN-10T | 1 |
| | Condensation controller | SK(YH) | 1 | SK(YH) | 1 | SK(YH) | 1 | SK(YH) | 1 | SK(YH) | 1 |
| | Arrester | HY5WS-17/50 | 3 | HY5WS-17/50 | 3 | HY5WS-17/50 | 3 | | | | |
| | Electromagnetic lock | DSN2-Z | | | | | | | | | |
| | Cabinet light | KGD-A | 1 | KGD-A | 1 | KGD-A | 1 | KGD-A | 1 | KGD-A | 1 |
| Switchgear dimensions (W*D*H) | | 500*900*1900 | | 500*900*1900 | | 500*900*1900 | | 500*900*1900 | | 500*900*1900 | |

## 成套柜柜体设计参考图 Switchgear Design Reference Diagram

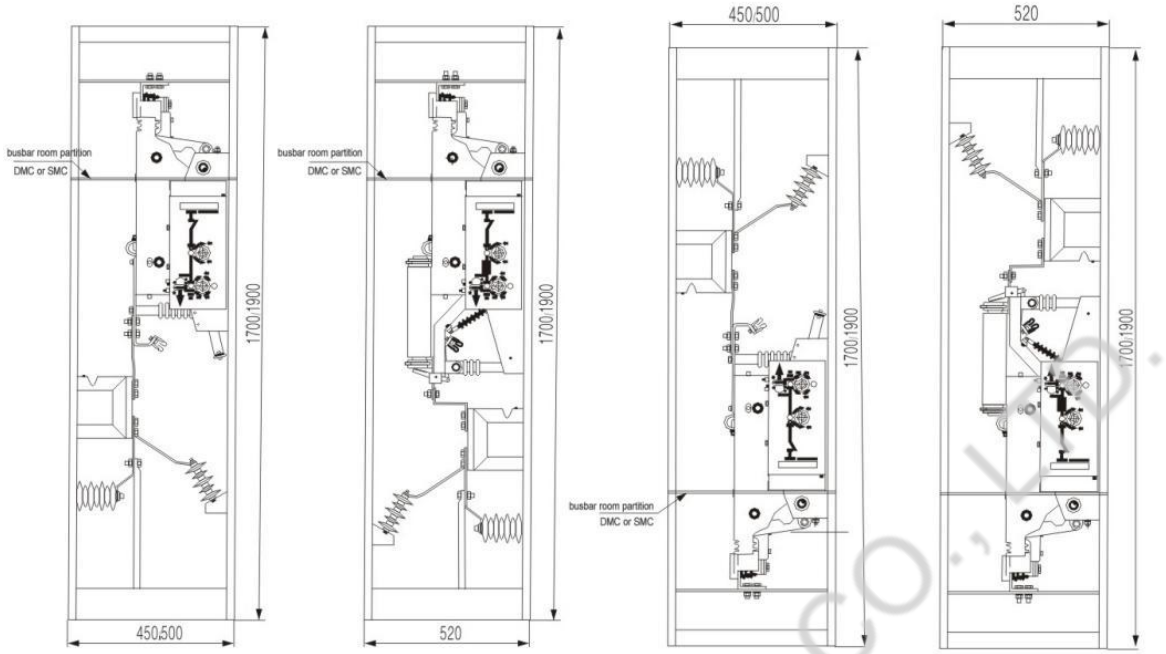


## 正面安装俯视图（下图是正面安装右操作，其它安装方式尺寸类推)

## Top View of Front Installation (The following drawing shows the front installation right operation, and the dimensions of other installation ways are analogous. )

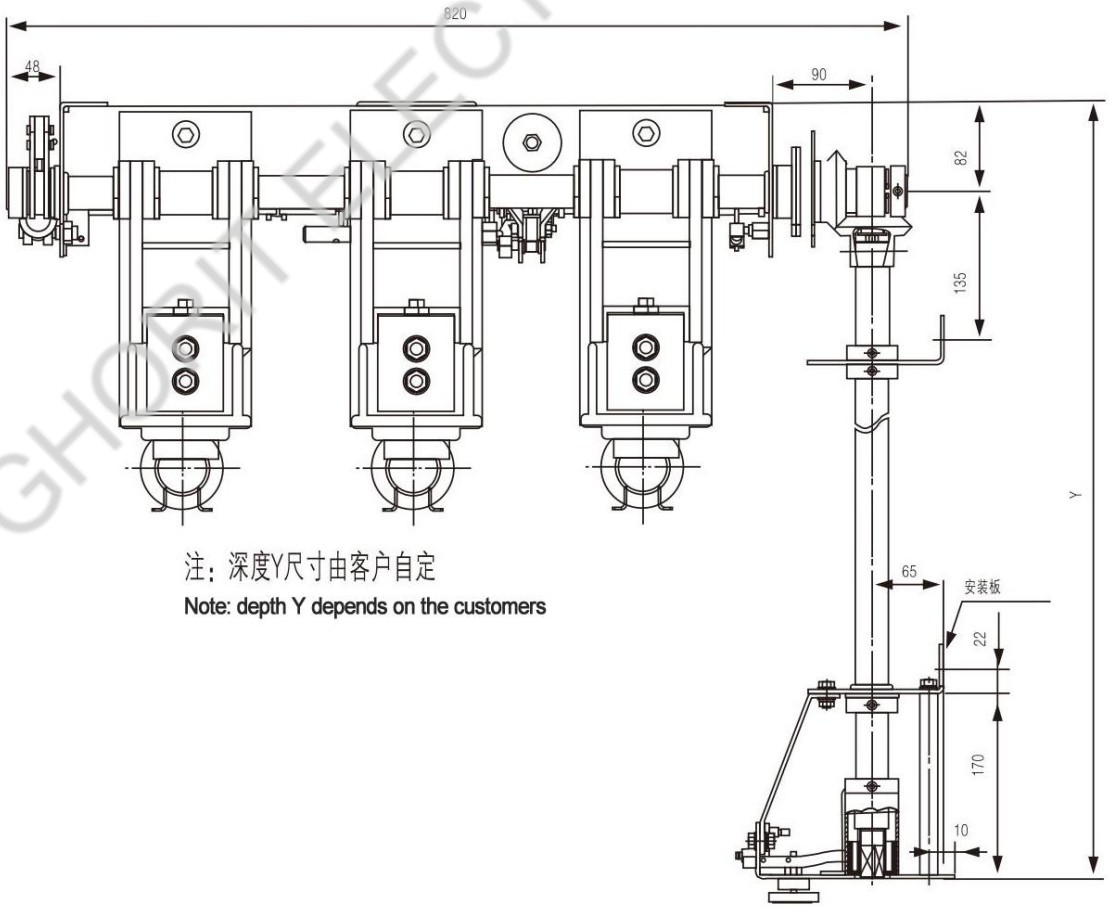

# 产品挂墙式参考图 Wall Mounted Type Reference Drawing